NO. 54 NOTES FROM THE SHOP $3.50

Woodsmith®

Woodsmith®

Number 54 **December, 1987**

Editor	**Donald B. Peschke**
Design Director	**Ted Kralicek**
Assistant Editors	**Douglas L. Hicks** **Douglas M. Lidster**
Project Designer	**Ken Munkel**
Technical Illustrators	**David Kreyling** **Cary Christensen** **Rod Stoakes** **Chris Glowacki**
Customer Service	**Sandy Baum, Mgr.** **Vicky Robinson** **Jackie Stroud** **Pat Koob**
Computer Operations	**Ken Miner**
Administrative Asst.	**Cheryl Scott**
Building Maintenance	**Archie Krause**

The Woodsmith Store

Operations	**Steve Krohmer**
Marketing Manager	**Steve Dozier**
Administrative Asst.	**Christel Miner**
Store Managers:	
St. Louis, MO	**Jon Behrle**
San Francisco, CA	**Michael DeHaven**
Des Moines, IA	**Kent Welsh**

WOODSMITH (ISSN 0164-4114) is published bimonthly (February, April, June, August, October, December) by Woodsmith Publishing Co., 2200 Grand Ave., Des Moines, IA 50312.
Woodsmith is a registered trademark of Woodsmith Publishing Co.

©**Copyright 1988** by Woodsmith Publishing Co. All Rights Reserved.

Subscriptions: One year (6 issues) $12.95, Two Years (12 issues) $22.95. Canada and Foreign: add $2 per year, U.S. funds only. Single copy price, $3.50.
Second Class Postage Paid at Des Moines, Iowa.
Postmaster: Send change of address notice, to Woodsmith Publishing Co., 2200 Grand Ave., Des Moines, IA 50312.
BACK ISSUES: All back issues of *Woodsmith* are still available. For a free booklet describing the contents and prices of all back issues, just send us your name and address to the address above.
SAMPLE COPY: We will be happy to send a free sample copy of *Woodsmith* to anyone you think would enjoy it. Just send us his/her name and address.

Sawdust

ABOUT THIS ISSUE. Usually at the beginning of a project one of the primary considerations is how it's going to look. We spend considerable time making sure the proportions look right, and all the design details work together.

Once the design is finalized, the next consideration is joinery — how do you join all the pieces together to make them look the way you intended?

Two of the projects in this issue (the Country Bench and the Microwave Cart) began in the reverse of this sequence. The designs of these projects, right from the beginning, depended a great deal on the joinery. And what seems most curious is the joinery we chose for each project is closely related, but centuries apart.

Both projects use knock-down joints. The Country Bench uses one of the oldest versions (a keyed mortise and tenon), while the Microwave Cart uses a modern version (European connector bolts).

The use of knock-down hardware is gaining acceptance. It's not so much a reflection of our super-mobile society that requires portable furniture, as it is a cost and time-saving manufacturing procedure.

Much of this hardware comes from Europe — particularly West Germany. We've been getting more interested in it, and since availability in the U.S. is getting better, we will probably include it in more projects in the future.

The other side of the coin is the old fashioned way to make knock-down joints — a keyed mortise and tenon. With all due regard to the speed and efficiency of using modern knock-down connectors, I would rather take the time to use a chisel and hand tools to make mortise and tenon joints. It's a lot more fun.

PRICE INCREASE. For the past nine years, ever since *Woodsmith* began, we have kept the subscription price the same. I suppose that, in itself, is an accomplishment. Over these years, we were able to beat inflation by becoming more efficient in the ways we did things.

But the combined effects of increases in the cost of paper, printing, postage, and just about everything else has forced us to raise the subscription price.

The new subscription price of *Woodsmith* is $12.95 for one year (six issues), or $22.95 for two years (twelve issues).

Your current subscription will not be affected by this price increase.

We will continue to fulfill all of the issues on your current subscription at the price you originally paid. However, when your subscription comes due for renewal, the new price will go into effect.

CONFUSION. Recently one of our competitors (the editors of *Wood* magazine) introduced a new publication for woodworkers. It's called *Weekend Woodworking Projects*.

Usually, I would applaud any new publication because I think it's important to have as much choice and variety as possible. The differences between publications provides a wealth of new information and ideas.

The problem with this new publication is that the differences aren't as great as they should be. Picture a magazine that has projects for woodworkers — one that's 24 pages long, printed in two colors (brown and black), uses a tan-colored paper, is three-hole punched for storage in a binder, has a protective cover, is published in Des Moines, Iowa six times a year, and contains no advertising.

Does that sound familiar? Well, it's also the format the editors of *Wood* chose for their new publication. And that's the problem. If you received a mailing piece that described this new publication, do you think it would cause confusion?

We are currently involved in a lawsuit to answer that question. I don't like lawsuits. But when it's a matter of principle and ethics, I feel obligated to take a stand.

However, it's not whether I like it or not. The problem is the confusion it causes to all woodworkers. Everyone has the right to know what he/she is buying.

I've received several notes and letters from readers who said they had been confused by the mailing piece for this new publication. They weren't sure whether it was actually for *Woodsmith* or not, or if *Woodsmith* was publishing it.

At any rate, I wanted to mention all of this so that you'd know what's going on.

NEW FACES. On to a lighter subject. Terrie Noll has been the manager of our store in San Francisco (Berkeley), California since last September. She signed on then to help us get the store up and running in its new location, and to look for a permanent manager.

Terrie did an outstanding job. And now she's returning to her "real" job — making custom furniture. (An article about her art nouveau cabinet appeared in *Fine Woodworking* May/June 1987.)

Michael DeHaven has just joined us as our new store manager. I've been impressed by the enthusiasm and energy Michael is putting into the store. We're all glad to welcome him as the manager of the *Woodsmith* store in Berkeley, California.

NEXT MAILING. The next issue of *Woodsmith* (No. 55) will be mailed during the week of April 4, 1988.

Tips & Techniques

ROUTER TABLE GUARD

Here's a quick way to add a removable guard to your router table fence. It's simply a piece of clear ⅛" plastic that fits in a saw kerf cut into the face of the fence.

To cut the kerf, set the table saw rip fence 1¼" away from the blade and then lower the blade below the table. Next center the router table fence over the saw blade and clamp it to the rip fence.

Now turn on the saw and raise the blade up into the wood until it's about ⅝" above the saw table. (Since the blade is circular, the kerf will be semi-circular.)

Next cut the back edge of a piece of ⅛" plastic to match the arc of the kerf. (You can probably find a scrap of plastic this size at a local glass shop.) Then round the front edge so that as you push a workpiece along the fence, the guard keeps your fingers away from the bit.

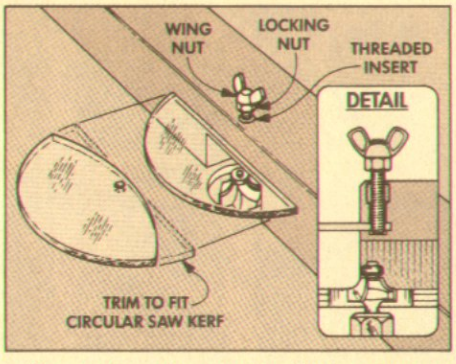

To secure the guard, first mount a threaded insert into the top of the fence. Then cut off a bolt that fits the insert and add a nut and wing nut to one end. (Or use a thumb screw.) Finally, screw the bolt down through the insert and through a hole in the plastic guard.

Yosh Sugiyama
Redding, California

DUSTPROOF PICTURE FRAMES

After framing a picture, I take the extra step of making the back of the frame dustproof by covering it with brown paper. (A brown grocery bag works fine.)

To do this, cut the paper a little larger than the frame back. Then run a film of yellow wood glue around the back edge of the frame and press the paper down smooth.

Now with a damp sponge or a spray mister, moisten the paper well and keep it face up until the paper and glue dries. When it's dry, the paper shrinks up drum tight.

After the glue is completely dry, hold a sanding block at a 45° angle to the back of the frame and sand through the paper. Sand until the excess paper around the edges is free, but not enough to disturb the wood.

Elizabeth Voirol
Monroeville, Indiana

BENCH EDGE VISE CLAMPS

After seeing the commercially-available bench edge vise clamps made from metal in *Woodsmith* No. 50, I decided to make a set with some scraps of hardwood. They're a convenient way to hold drawers, frames, and panels alongside the bench while planing and sanding.

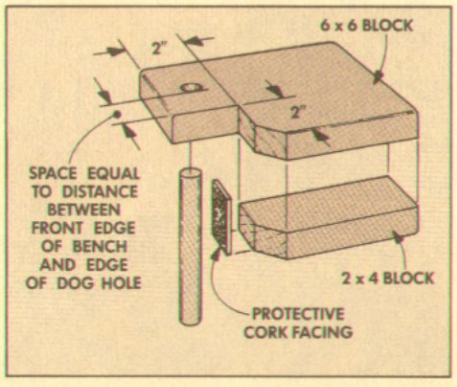

The clamps are easy to make, but they have to be made in a mirrored set, and custom made for your specific bench.

To make a clamp, start by cutting a 6" x 6" square block out of 4/4 (or ¾") stock. Then, cut a 2" x 2" notch out of one corner.

Next, cut a 2" x 4" block out of 4/4 (or ¾") stock, and glue it to the bottom of the top block so it's flush with the edge and aligned with the notch. To make it easier to bring a workpiece into the clamp, I cut an angle off the front corner of the notch.

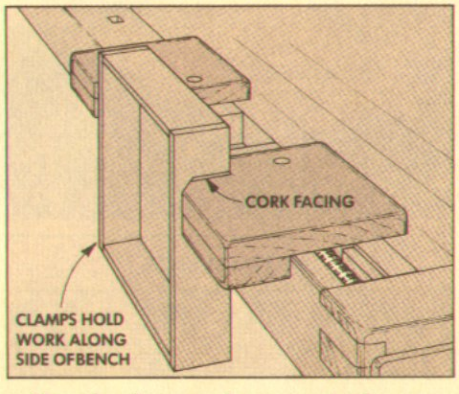

Now the clamp can be customized to your bench. Measure a dog hole to determine the diameter of a dowel that will fit down into the holes. (A ⅝"-dia. dowel is the largest the *Woodsmith* bench will accept.) Then cut the dowel 5" long.

To determine the location of the dowel hole on the top plate, measure the distance from the front edge of your workbench to the near edge of any dog hole. Then transfer this dimension to the top plate. The distance from the notch to the near edge of the dowel should equal this dimension. Once this is laid out, drill a hole for the dowel and glue it in place.

Finally, I glued a thin cork facing in the notch to protect the workpiece. Then make the second edge clamp a mirror opposite of the first.

Rodney C. Hayward
Bundanoon, NSW, Australia

SOCKET TEMPLATE

I've noticed that you often recommend in *Woodsmith* to use a coin as a handy template to mark a corner that's to be rounded off. (A quarter = about ½" radius, a nickel = about 7/16 radius, a penny = about ⅜" radius, and a dime = about 11/32" radius.)

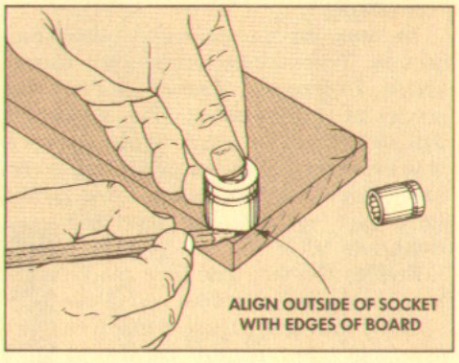

I've found another convenient item — the sockets from my socket wrench set. The small increments between the different sockets yield a large variety of radii to choose from. Just hold the outside of the socket at the corner with one hand and draw around it with the other.

Note: The measurement stamped on the outside of the socket refers to the bolt or nut it will accept, not the radius or diameter of the socket itself.

Robert Coleman
Asheville, North Carolina

SEND IN YOUR IDEAS

If you'd like to share a woodworking tip with other readers of *Woodsmith*, send your idea to: *Woodsmith*, Tips & Techniques, 2200 Grand Ave., Des Moines, Iowa 50312.

We pay a minimum of $10 for tips, and $15 or more for special techniques (that are accepted for publication). Please give a complete explanation of your idea. If a sketch is needed, send it along; we'll draw a new one.

Microwave Cart

You probably wouldn't guess by first impression, but the design of this microwave cart is strongly influenced by contemporary European design. Not the *fancy* European stuff. But the basic household furniture and storage systems being designed by commercial furniture companies — particularly in West Germany.

Of the furniture we've seen, there is a strong trend toward the use of knock-down connectors. It's not always to make the piece more portable. The use of knock-down connectors has become a basic joinery technique — one that's gaining acceptance in the U.S. as well.

In most projects, there are a variety of joints that could be used. For example, on this cart you have a choice of methods for joining the the shelves of the cart to the side frames. You could use mortise and tenon joints, or dowels, or mechanical knock-down connectors.

We chose the European knock-down connectors. These connectors are ingeniously simple. They consist of a connector bolt that screws into a cross dowel. (This is shown in Fig. 15.) All you have to do to install them is drill two intersecting holes — which is certainly a lot easier than making a mortise and tenon joint, and probably easier than using dowels.

Besides the fact that they can be knocked down (assembled and disassembled with ease), these connectors have one other feature permanent joints lack. They can be tightened if the joint becomes loose over time (or as the relative humidity changes with the seasons).

As with anything else, there are trade-offs to consider. Permanent joints (like mortise and tenon or dowels) are not visible (unless you want them to be). But the knock-down connectors we used have a large round head with a hexagonal socket for tightening with an Allen wrench that shows on the surface. (You can see the heads of these connectors in the photo — they're on the faces of the side frames.) This, in itself, is a design consideration.

THE SIDE FRAMES

Of course, I couldn't use knock-down connectors for every joint on this cart. The first joints I had to make were the ones to join the pieces for the side frames. I chose mortise and tenon joints (but dowels could be used).

CUT STILES. The frames consist of two stiles (vertical pieces) and three rails (horizontal pieces). To make the side frames,

MATERIALS LIST

Overall Dimensions: 20" d x 28¾" w x 45¾" h

A	Frame Stiles (4)	13/16 x 2½ - 43½
B	Frame Rails (6)	13/16 x 3½ - 17
C	Front Shelf Rails (4)	13/16 x 2 - 25¾
D	Back Shelf Rails (4)	13/16 x 3½ - 25¾
E	Shelf Slats (52)	13/16 x 1 15/16 - 17¼
F	Frame Handles (2)	13/16 x 1½ - 20
G	Door Handle (1)	13/16 x 1½ - 26 Rough
H	Door Slats (13)	13/16 x 1 15/16 - 10
I	Door Bottom Rail (1)	13/16 x 13/16 - 26 Rough

CUTTING DIAGRAM

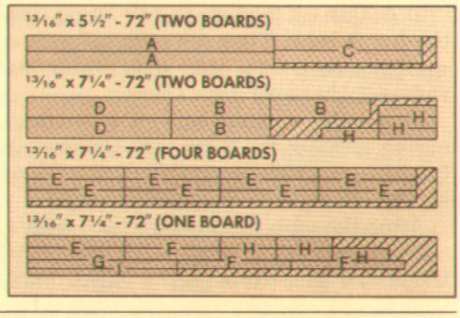

first cut the four stiles (A) out of 4/4 stock (13/16" actual thickness) to a width of 2½" and a length of 43½", see Fig. 1. Then mark out the location of the mortises used to join the rails (B) to the stiles (A).

LAY OUT MORTISES. When marking the position of the mortises, I laid out the measurements on the *face* of one of the stiles first, see Fig. 1.

All three mortises are 2" wide. The ones on the top and bottom of the stile are positioned ¾" from the ends. The mortises for the middle rail are positioned 11¾" from the top of the stile, see Fig. 1.

To ensure that the mortises are marked out on all four stiles in exactly the same position, clamp the four stiles together, see Fig. 2. After they're clamped together, square lines across the edges of all four pieces, using the marks on the face of the first stile for the reference points.

CUT MORTISES. Now it's just matter of cutting ¼"-wide mortises centered on the the stock, see Mortise Detail in Fig. 4. (I did this on a drill press by drilling overlapping holes with a ¼" mortise bit.) Then clean up the cheeks of the mortises with a chisel. (See *Woodsmith* No. 26 for more on mortise and tenon joints.)

CUT RAILS. After the mortises are cut, I cut out the six rails (B) for the side frames. These pieces are 3½" wide by 17" long, see Fig. 3.

Shop Note: The length of the rails accounts for the 15" needed between the stiles of the side frame — this is the shoulder-to- shoulder dimension on the rails, see Fig. 3. Then 2" is added to account for the 1"-long tenons on each end.

CUT TENONS. After the rails are cut to size, tenons are cut on each end to fit the mortises in the stiles, see Fig. 4. I cut the tenons by making overlapping cuts on the ends of the rails. These cuts, in effect, are like cutting wide rabbets on the ends of the rails. (Again, see *Woodsmith* No. 26 for more on mortise and tenon joinery.)

HOLES FOR SHELF. Before assembling the frame, I drilled a series of holes for mounting the adjustable shelf. (In the photo, this shelf is the second one up from the bottom of the cabinet.)

The adjustable shelf is mounted with right-angle shelf support pins, refer to Fig. 15. These pins require ¼"-dia. holes on the inside faces of all four stiles.

To mark the location of these holes, dry-assemble the frames first, see Fig. 5. Then lay out the location of the holes on the inside edges of the four stiles, see Fig. 1. The holes are ½" from the inside edge and 2" apart on center.

ASSEMBLE SIDE FRAMES. After the holes are drilled on the inside edges of the four stiles, the side frames can be assembled. Glue and clamp the mortise and tenon joints together, making sure the frames are square, see Fig. 5.

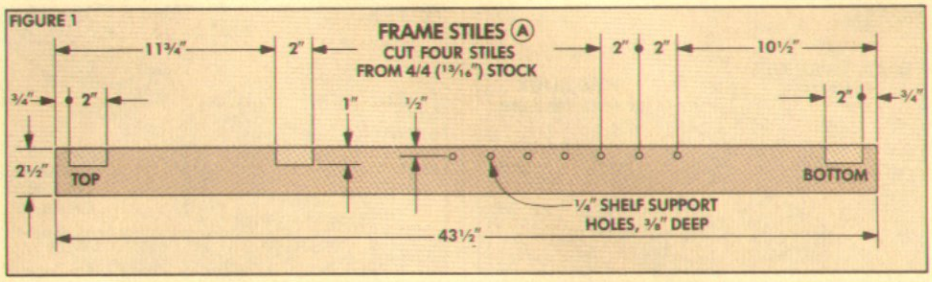

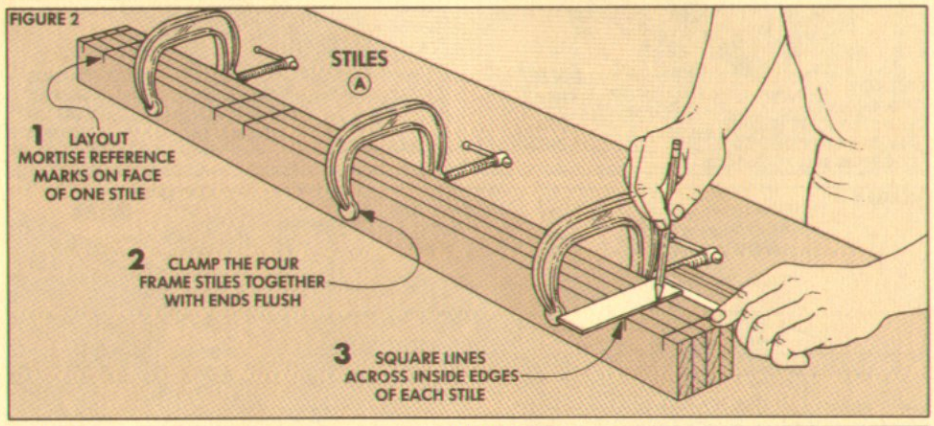

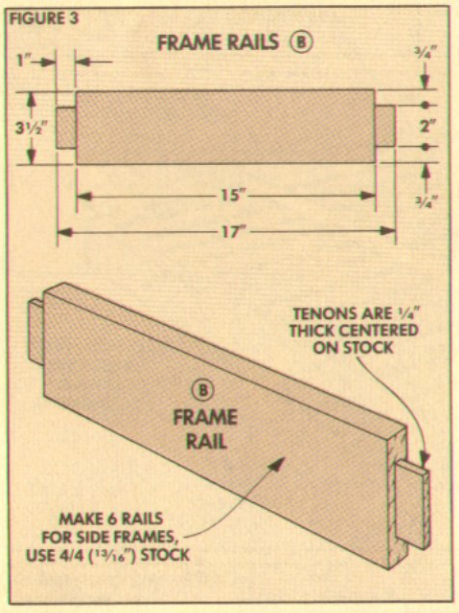

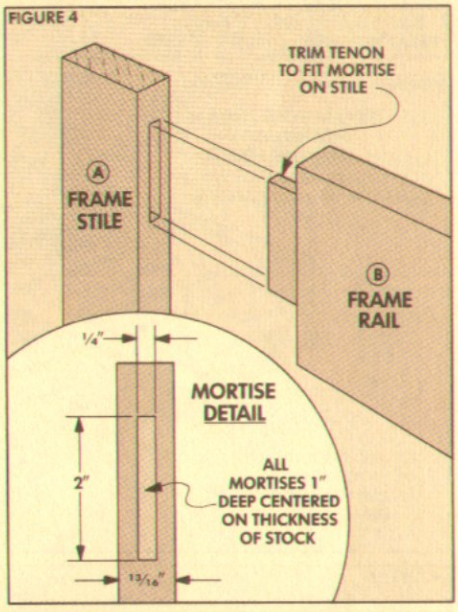

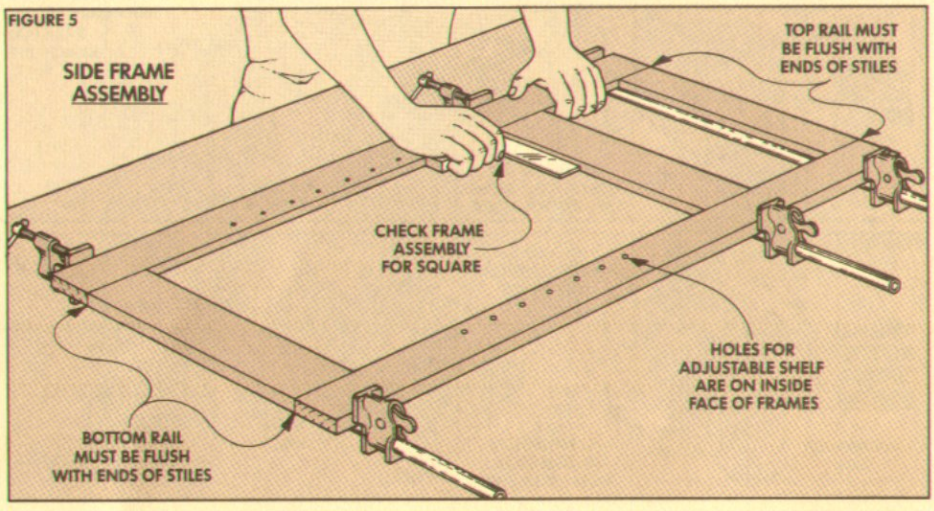

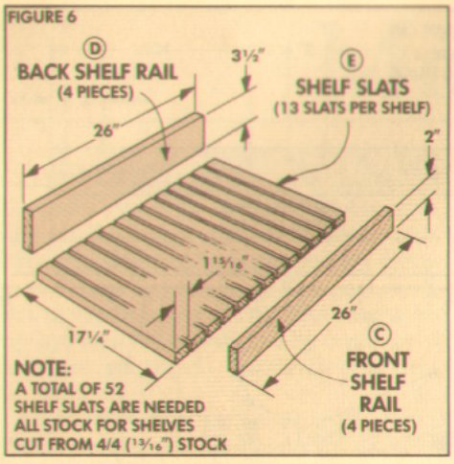

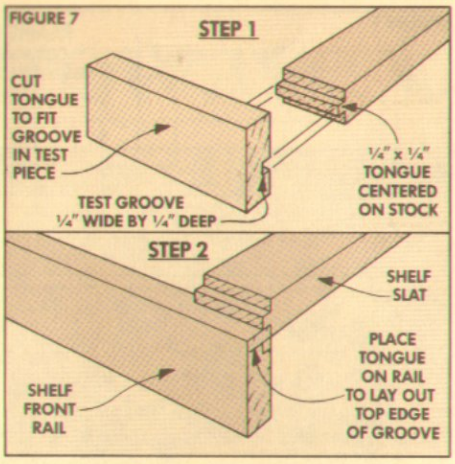

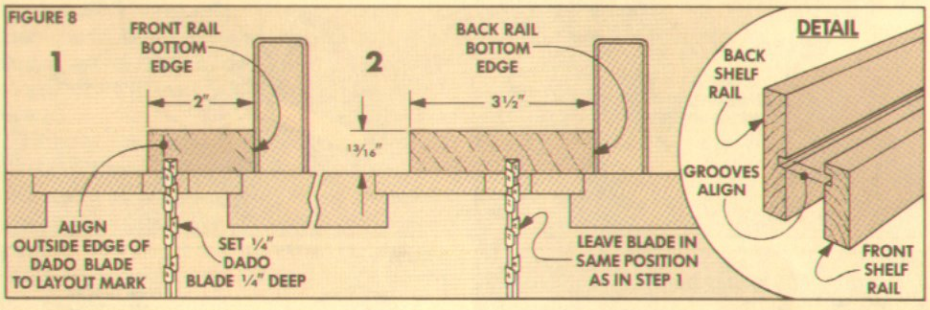

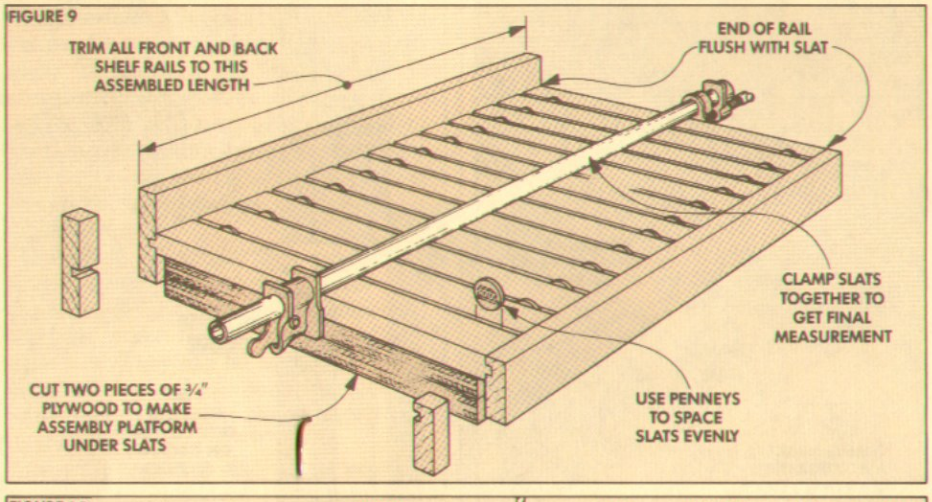

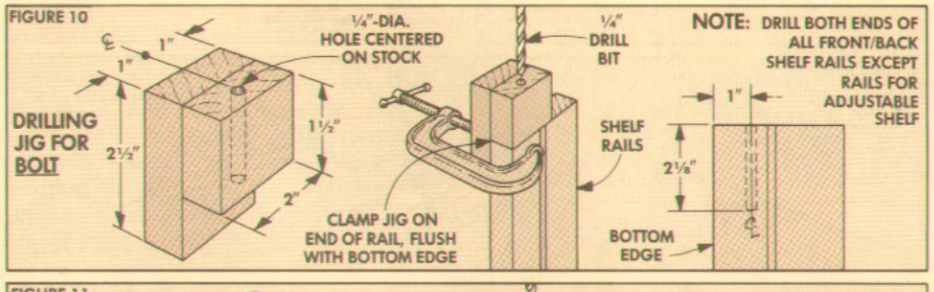

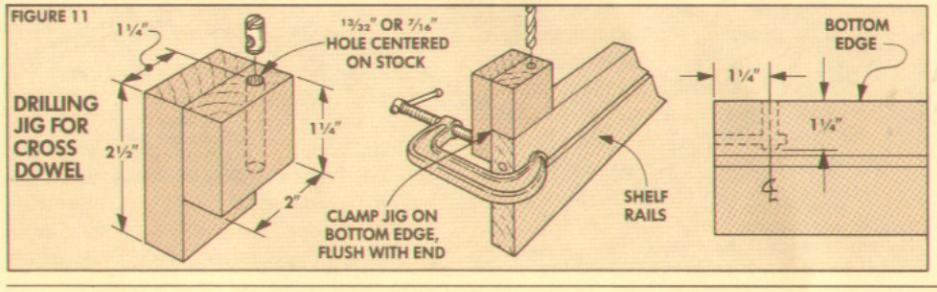

THE SHELVES

The two side frames are held together by four shelves — and all four shelves start out exactly the same way.

RAILS. To make the shelves, cut the front rails (C) 2" wide and the back rails (D) 3½" wide. Then all 16 rails are cut to a rough length of 26".

SLATS. Also cut a total of 52 slats (E) (13 for each shelf) out of 4/4 stock 1 15/16" wide by 17¼" long. (This length was determined so when the slats are joined to the rails, the rails will be the proper distance apart to be centered on the stiles of the side frame, refer to Fig. 14.)

TONGUE AND GROOVE. The slats are joined to the rails with tongue and groove joints. Begin by cutting rabbets on the ends of the slats to leave ¼" x ¼" tongues, see Step 1 in Fig. 7. (I cut a ¼" groove in a scrap and cut the tongues to fit.)

LAY OUT GROOVES. After the tongues are cut, they can be used to lay out the position of the grooves on the front rails (C). Hold a slat on the rail so the tongue rests on the top edge, as shown in Step 2 in Fig. 7. Then mark across the bottom edge of the slat to indicate the top edge of the groove. (When the groove is cut with this procedure, the top face of the slat will be flush with the top edge of the front rail.)

CUT GROOVES. After the mark is made, position the *bottom edge* of the front rail against the fence of the table saw and adjust the fence so the *outside* of a ¼"-wide dado set cuts on the marked line, see Step 1 in Fig. 8. Then cut ¼"-wide grooves on all the front rails (C).

Leave the fence in the same position and cut the grooves on the back rails (D), making sure the bottom edge of the rail is against the fence, see Step 2 in Fig. 8.

TRIM RAILS TO SIZE. Now the rails can be trimmed to final length. To do this, dry-assemble the slats between the rails. I used pennies to get even spacing between the slats, see Fig. 9. (To keep the pennies in place, cut a couple of pieces of ¾" plywood as an assembly platform.)

Now clamp the shelf together and mark the end of the rails so they're flush with the outside slats, see Fig. 9. Then cut *all* rails to the same length.

HOLES FOR CONNECTORS

Before assembling the shelves, two intersecting holes are drilled in the ends of the rails for the knock-down connector bolts and the cross dowels.

DRILLING JIG. To drill the holes in the ends of the rails for the bolt, I made a simple drilling guide. Rip a 4"-long scrap of 4/4 stock 2" wide, and then cut off a length about 1½" long, see Fig. 10. Then drill a ¼"-dia. hole centered on the width and thickness of this piece. Now glue this piece to the remaining scrap.

DRILL HOLES. Align the jig with the *bottom edge* of a rail and clamp it in place. Then drill a ¼"-dia. hole 2⅛" deep into the end, see Fig. 10.

HOLES FOR CROSS DOWELS. Next, an intersecting hole is drilled on the bottom edge of each rail for the cross dowel. Again, make a small drilling jig as shown in Fig. 11, and use it to drill holes centered 1¼" from the ends. (Shop Note: Since these cross dowels are metric, the closest standard size is 13/32", but 7/16" is okay.)

ASSEMBLE SHELVES

The last step before assembling the shelves is to round over all four edges of the slats with a ⅛" round-over bit, see Fig. 12. Also, round over all four edges of the back rails (D), but only three edges of the front rails (C), see End View in Fig. 12.

ASSEMBLY. Now three of the shelves can be assembled. (The adjustable shelf needs a few more steps.) To assemble the three shelves, place the slats on the plywood assembly platform (space them evenly with pennies) and clamp this assembly together, see Fig. 12. Then glue and clamp the rails to the ends of the slats.

ADJUSTABLE SHELF. Before the adjustable shelf can be assembled it needs three more steps. First, the front and back rails have to be trimmed down by ⅛" to allow for the thickness of the shelf support pins, refer to Shelf Support Detail in Fig. 15.

After the rails are trimmed down, I rounded over the ends, see Fig. 13. Finally, since the rails are trimmed down in length, also trim 1/16" off the two outside slats so the spacing comes out right.

You can assemble the adjustable shelf now, but I waited until the whole cart was assembled to make sure the adjustable shelf would fit without binding.

HOLES FOR CONNECTORS

To get the basic cart assembled with the knock-down connectors, another series of holes is drilled in the side frames.

LAY OUT HOLES. To lay out these holes, first draw lines on the ends of the shelf rails centered on the holes for the connector bolts, see Fig. 14. Then lay the shelf on the side frame so the shelf rails are centered on the stiles of the side frame. Now extend the centerlines onto the face of the side frame stiles, see Fig. 14.

After the centerlines are marked, also mark cross lines 1" from the bottom, 2½" from the top, and 13½" from the top, see Fig. 14. Then I used a Portalign to drill ¼"-dia. holes through the stiles.

ASSEMBLY. To assemble the shelves to the side frames, slide a connector bolt through the hole in the side frame and screw it into the cross dowel in the shelf rail, see Cross Section in Fig. 15. (If the holes don't match up exactly, enlarge the hole in the rail.)

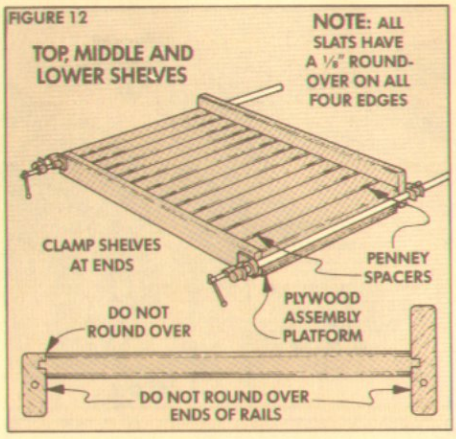

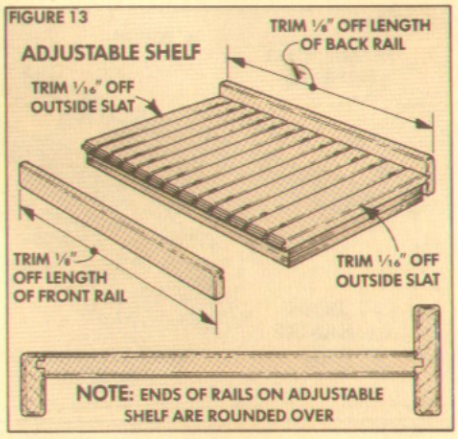

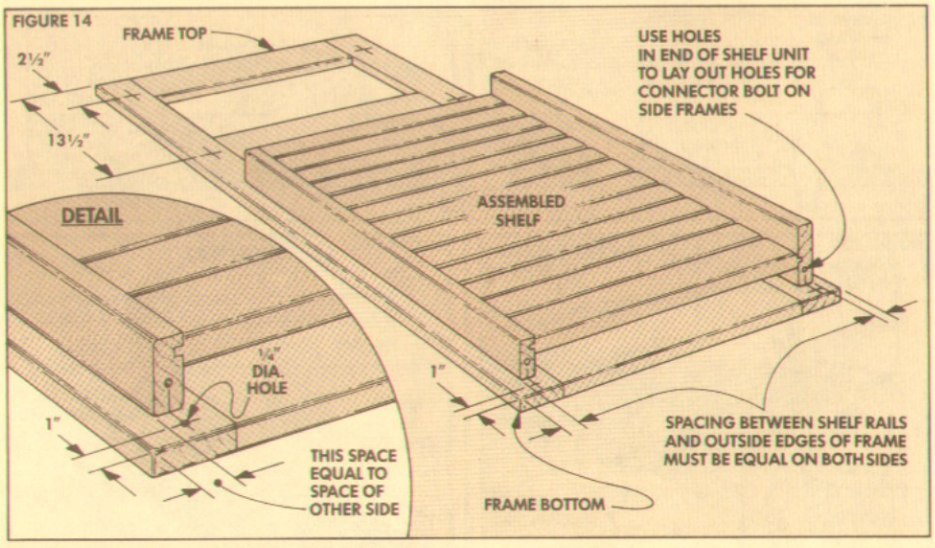

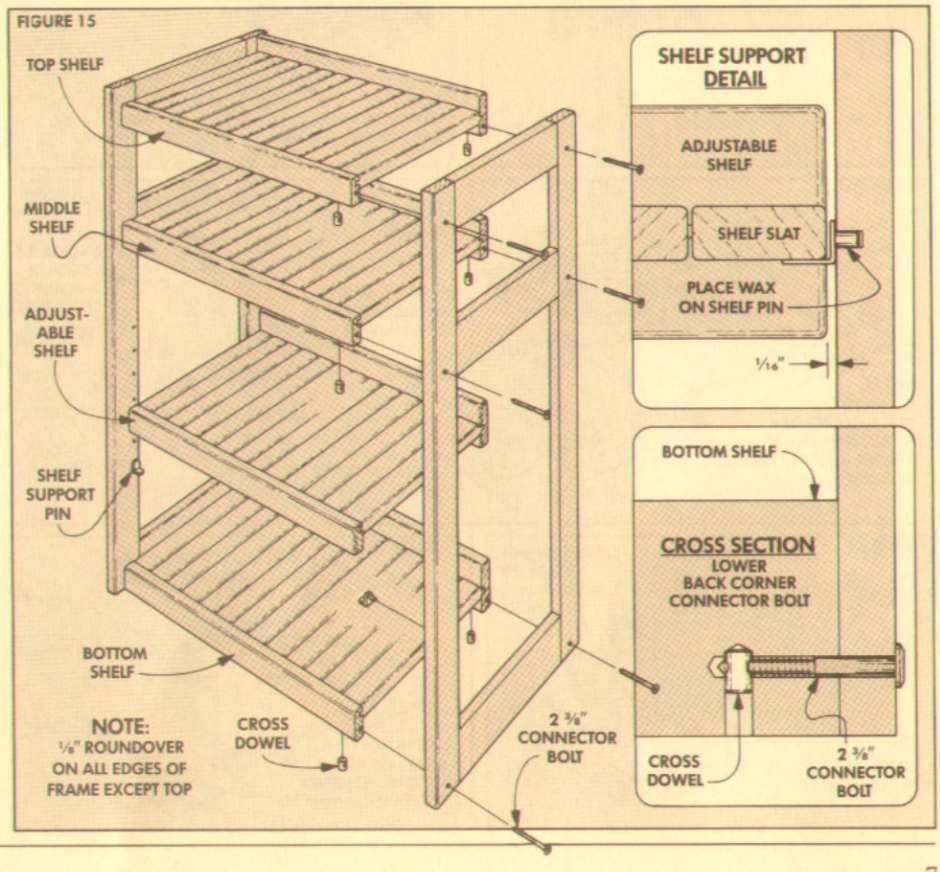

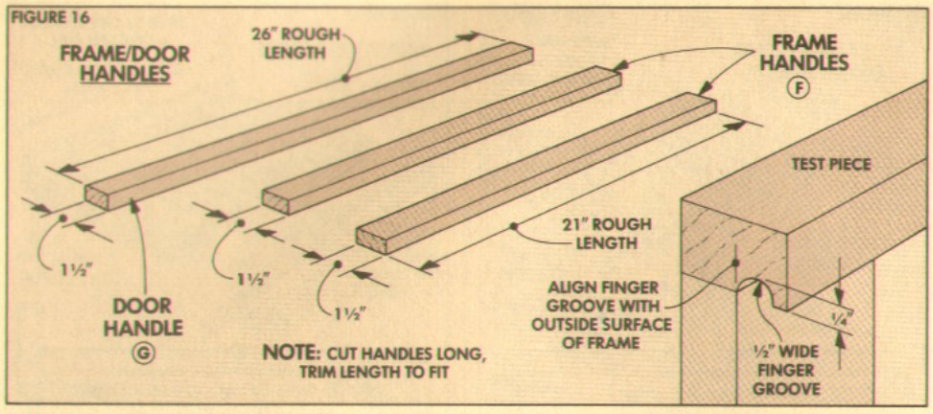

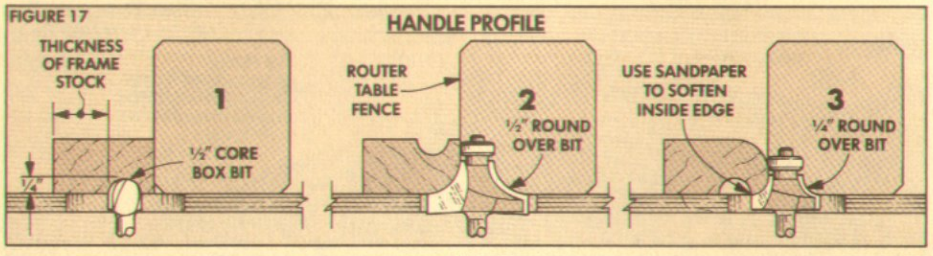

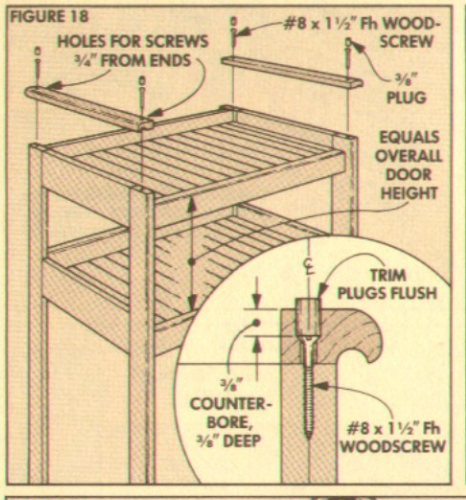

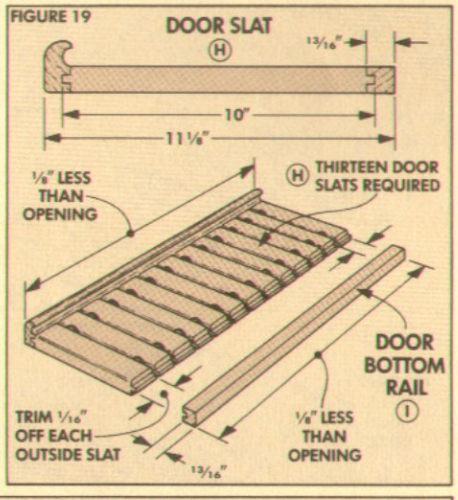

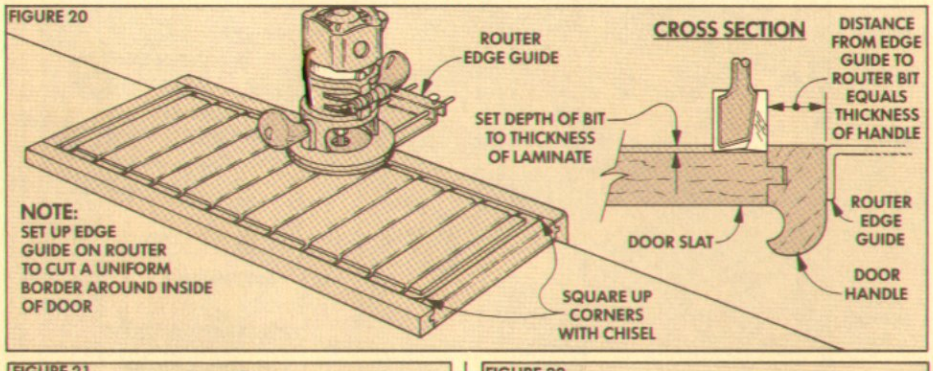

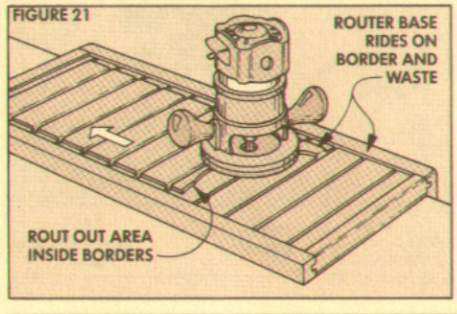

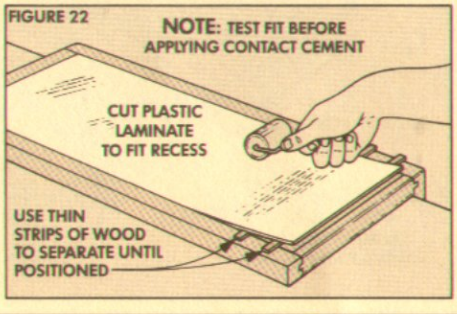

THE HANDLES

At this point the basic cart is assembled and could be used "as is." But I added some handles on the top edges of the side frames to make it easier to move around.

CUT STOCK. To make the handles (F) rip two pieces of 4/4 stock 1½" wide by 21" long, see Fig. 16. While I was at it, I also made another handle (G) 26" long for the drop down door. Also, cut one extra piece as a test piece.

ROUT PROFILE. Now use the test piece to determine the position of the finger groove on the handle. I cut this groove on the router table using a ½"-diameter core box bit, see Step 1 in Fig. 17. Adjust the fence on the router table so when the bit is at a height of ¼" the groove is right on the outside surface of the side frame (or door frame), refer to Figs. 16 and 19.

After determining the position of the groove, cut it on all of the handles. Then switch to a ½" round-over bit to round the top corner of the handle, see Step 2 in Fig. 17. And finally, round over the bottom edge of the finger lip with a ¼" round-over bit, see Step 3 in Fig. 17.

MOUNT HANDLES. After the finger lips are routed, cut the handles (F) to final length to match the width of the side frame. Then attach the handles with glue and three screws, counterboring the holes and filling them with plugs, see Fig. 18.

DROP DOWN DOOR

As an option, I added a drop down door. The construction of this door is virtually identical to that of the shelves.

RAILS. Instead of front and back rail, however, the door has a handle (which has already been cut) and a narrow bottom rail, see Fig. 19. Cut the bottom rail (I) to a width of 13/16" and to a rough length of 26".

SLATS. Next, 13 slats (H) can be cut 1 15/16" wide. As for the length, you have to do some arithmetic. The slats are cut to length so the overall door height is equal to ⅛" more than the measurement from the top of the middle shelf to the top of the top shelf, see Fig. 18.

So, the slats are cut to this length *minus* the thickness of the handle (13/16"), minus the width of the bottom rail (13/16"), *plus* the combined length of the tongues (½"), see Fig. 19. (On our cart, this came to 10".)

CUT TONGUES ON SLATS. After cutting the slats to length, cut rabbets on the ends to leave ¼" x ¼" centered tongues (refer to Fig. 7). As on the shelves, use the tongue to determine the position for the grooves on the handle (G) and the bottom rail (I). Then cut the grooves.

CUT TO LENGTH. Now the handle and rail can be cut to final length. This length is the distance between the side frames less ⅛" for clearance, see Fig. 18. (This is the same length as the adjustable shelf.)

TRIM SLATS. After cutting the handle and rail to length, dry-assemble the door using pennies as spacers between the slats, see Fig. 19. Now trim the outside two slats to match the length of the handle and rail.

ASSEMBLY. As on the shelves, round over the edges of the slats. Then go ahead and assemble the door.

PLASTIC LAMINATE INSERT

Since the inside face of the door is the surface that will be used as a work surface, (refer to photo on page 4), I decided to add plastic laminate (Formica) to this face.

ROUT RECESS. To install the laminate, I routed a recess on the inside face of the door. Use a router with an edge guide to rout a border around the inside face of the door, see Fig. 20. Adjust the guide to the thickness of the handle and the rail so the bit cuts the recess right on the shoulder line (where the slats meet the handle and the rail, see Cross Section in Fig. 20.)

Next, remove the edge guide and rout out the center section to form a recess for the plastic laminate, see Fig. 21.

INSTALL LAMINATE. Cut the plastic laminate to size to fit in the recess. Then apply contact cement and press the laminate in place, see Fig. 22.

MOUNT DOOR HINGE

Now that the door is complete, it can be mounted to the middle shelf with a piano hinge. The trick is to mount the hinge so the knuckle is *down* — not in the way when the door is lowered, see Fig. 24

RABBET FOR HINGES. The first step is to cut a rabbet along the top edge of the middle shelf for the hinge. I did this on the router table, see Figs. 23 and 24.

COUNTERSINKS. The only problem with mounting the hinge is that half the countersinks are on the wrong side of the hinge for this mounting technique. So, I drilled new countersinks and then screwed the hinge in the rabbet, see Fig. 25.

RABBET ON DOOR. Before mounting the door to the other flap of the hinge, you have to account for two measurements. When the door is mounted, the top edge of the handle should be flush with the top shelf, see Fig. 26. And you have to account for the thickness of the hinge.

Trim off the bottom edge of the door rail (I) taking these two measurements into consideration. Then rout the rabbet on the bottom edge for the hinge, see Fig. 27.

MOUNT DOOR. Finally, center the door in the opening and mount it to the hinge, screwing up from the bottom, see Fig. 28.

LID SUPPORT AND CASTERS. To support the lid when it's lowered, I added lid supports to both sides of the door, see Fig. 29. I also added casters to the bottom of the bottom shelf, see Fig. 30.

FINISH. The last step is to finish the cart. I used Minwax Antique Oil.

FIGURE 23

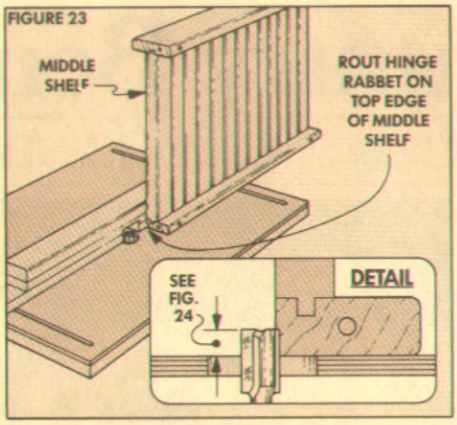

FIGURE 24

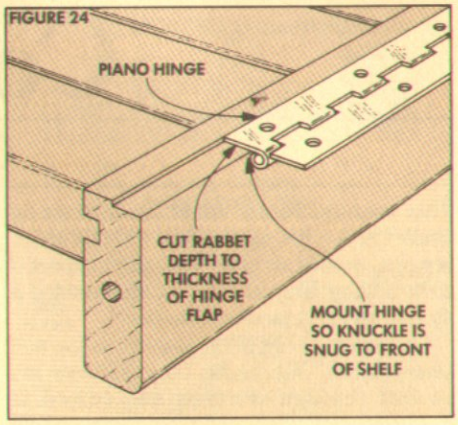

FIGURE 25

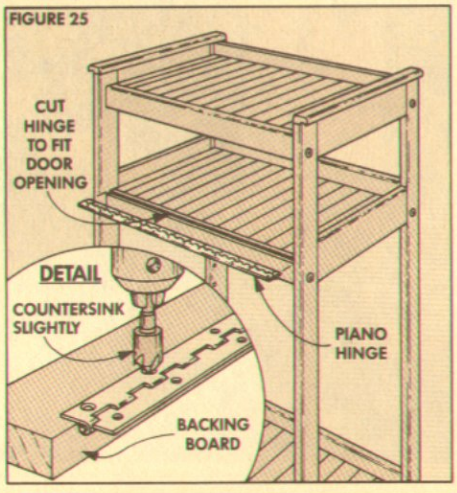

FIGURE 26

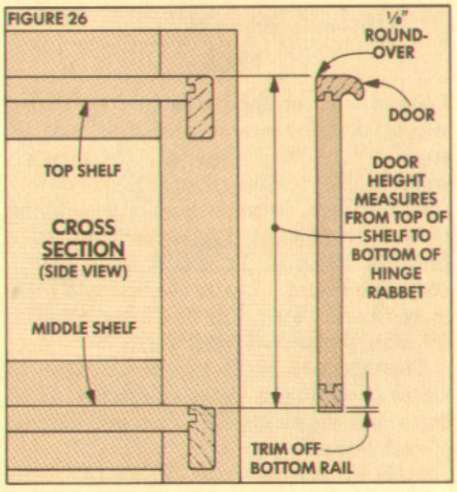

FIGURE 27

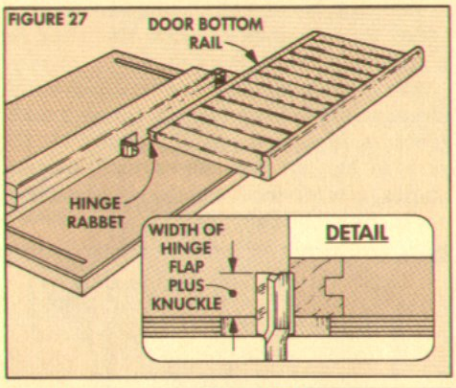

FIGURE 28

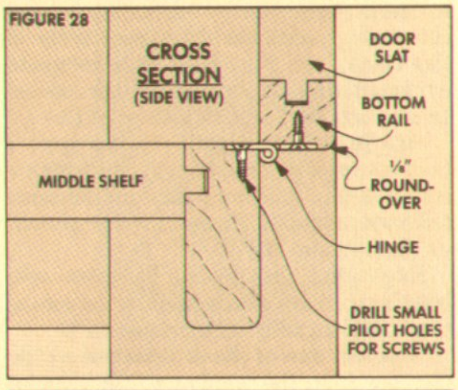

FIGURE 29

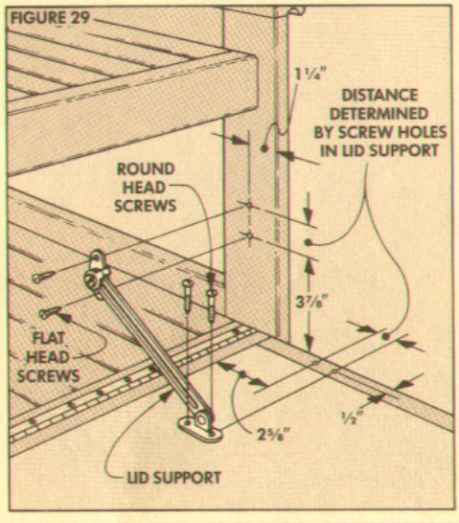

FIGURE 30

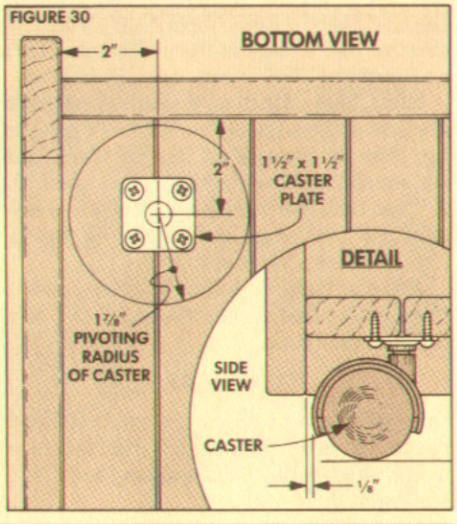

Country Bench

OLD FASHIONED JOINERY

This country bench offers an interesting challenge — it's assembled without nails, screws, dowels, or glue. You might expect it to be a bit wobbly, but once it's assembled it stands up like a piece of granite.

The strength lies in the keyed mortise and tenon joints. When the tapered keys are pushed through mortises and tapped in tight, the seat, shelf, and stretchers are held firmly between the two ends.

ENDS

I began work on the bench by edge-gluing two blanks for the end pieces (A) from 4/4 stock (13/16" actual thickness) to a rough width of 12½" and length of 23½".

CUT TO SIZE. Once the blanks are dry and planed or sanded flat, trim them to a finished width of 12 and square up the ends, see Fig. 1. (Leave the blanks a little more than 23" long. The final length will be 23" after the arched top is cut.)

CENTERLINE. Next, to make it easier to locate all of the cuts in the end pieces, I laid out a centerline down the complete length of each blank.

THROUGH-MORTISES. After the centerline is marked on the blanks, lay out and cut through-mortises from both sides of the blank, see Fig. 1. (For a complete explanation on cutting a keyed mortise and tenon joint, see the article on page 13.)

JIG. To help "set out" the mortises, I built a simple jig, see Fig. 2. Start with a couple of pieces of scrap that are the same thickness as the stock used for the stretcher. (In my case, 13/16".)

Edge-glue the pieces between side boards to create a "window" in the center that's the length of the mortise (1½").

Now, cut one of the side boards so the distance from the window to the edge of the side board equals the distance from the mortise to the edge of the end blank. (This distance was 5 19/32" in my case.)

Next, glue a fence on the outside edge to hook over the edge of the blank. To use the jig, clamp it in place on the end blank and set out the mortises with a chisel, see Fig. 3. Then turn the blank over, hook the fence over the same edge, and set out the matching mortise on the other face.

After setting out the mortises, work from both faces to cut them all the way through the blank.

STRETCHERS

Once all of the mortises are cut in the end pieces, cut two stretchers (B) from 4/4 stock to a finished width of 2¼" and length of 27½", see Fig. 6.

TENONS. Next, cut 2"-long tenons centered on the ends of each stretcher to match the mortise, see Fig. 4.

KEY MORTISES. After the tenons are cut, chisel an angled key mortise through each tenon as explained on page 14 and 15. Be sure to lay out the cuts so one mortise angles from the front and the other mortise angles from the back, see Fig. 5.

KEYS. Now push the tenons through the mortises in the end pieces and cut tapered keys (C) to fit the key mortises. After the keys fit tightly in the mortises, cut the keys 3" long, see Fig. 7.

Shop Note: Since there may be inconsistencies from one angled mortise to another, I cut each individual key to match each key mortise and then labeled them.

FIGURE 1

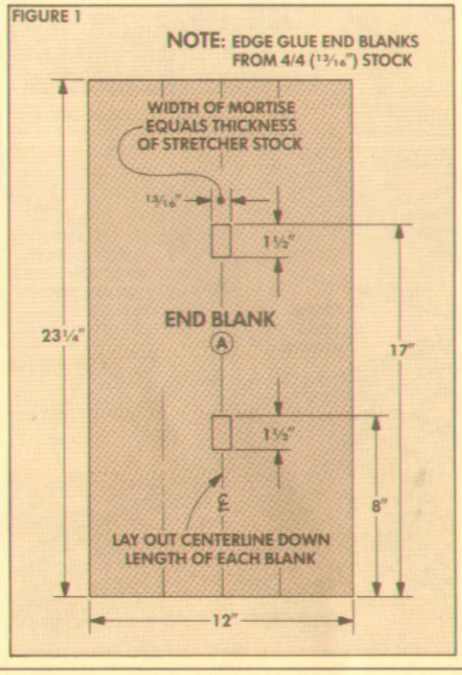

FIGURE 2

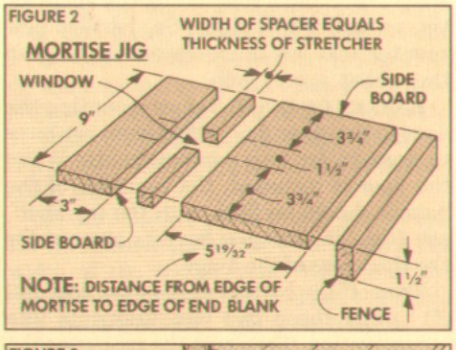

FIGURE 3

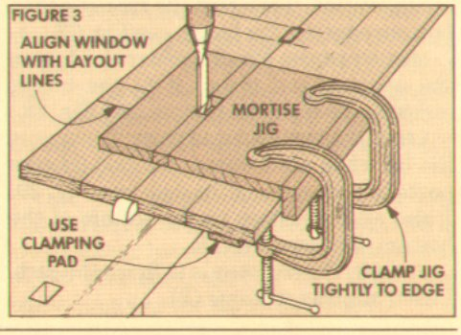

SEAT AND SHELF

Once the keys are cut, work can begin on the seat (D) and shelf (E). Start by edge-gluing the seat and shelf from 4/4 stock to a rough length of 24½" and rough widths of 11" (seat) and 7" (shelf).

CUT TO SIZE. After the blanks are planed or sanded flat, cut the seat 10" wide and the shelf 6" wide, see Fig. 6.

To determine the length of the seat and shelf, measure the shoulder-to-shoulder distance of the stretcher (23½" in my case) and add ½" for the ¼"-long tongues that will be cut on each end, see Fig. 6.

STOPPED DADOES

The tongues on the ends of the seat and shelf fit into stopped dadoes routed on the inside face of the end pieces. It's worth it to spend a few extra minutes at this point to determine which face of the end pieces to cut these stopped dadoes in.

If the end pieces are cupped (warped), a gap will show between the inside face and the edges of the seat. To prevent this, face the concave side toward the *inside*, see Fig. 7. Then the key will force the end pieces tight against the outside edges of the seat.

LOCATE DADOES. Once the inside and outside faces are decided, temporarily assemble the stretchers to the end pieces. Now you can determine the location of the top of the ½"-wide stopped dadoes.

To do this, lay the seat sideways on top of the stretcher (B) and against the end piece (A), see Fig. 8. Then use a chisel to scribe a short line onto the end piece right at the top of the seat, see Detail in Fig. 8. Now do the same on the other end and above the shelf (E) at both ends.

LAYOUT THE DADOES. Next, use a pencil to extend these marks across the board. Then lay out the bottom of the dadoes ½" down from the top line, see Fig. 9.

Now, mark the ends of the dadoes so the seat dado is 9½" long and the shelf dado is 5½" long. Center both on the width.

CUT THE DADOES. To cut the dadoes, I started by drilling ½"-dia. stop holes 5/16" deep at each end, see Fig. 10.

Next, mount a ½" straight bit in the router and position the bit in one of the stop holes. Now hold the router in the same position it will be during routing and mark a partial arc to indicate the circumference of the base, see Fig. 10. Do the same at the other stop hole.

Then, using these two arcs, align a straight board as a fence and clamp it in place. To rout the dado, lower the router bit to 5/16" deep (see Detail A), place the bit in one of the stop holes, and rout to the other hole. (Shop Note: Hold the router securely before turning on the power.)

CLEAN OUT ENDS. The last step on the dadoes is to square up the ends with a chisel, see Detail B in Fig. 10.

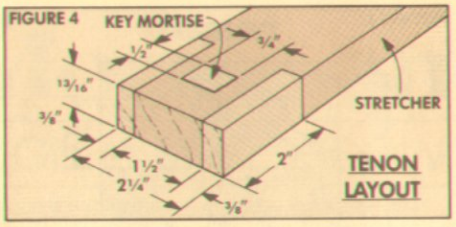

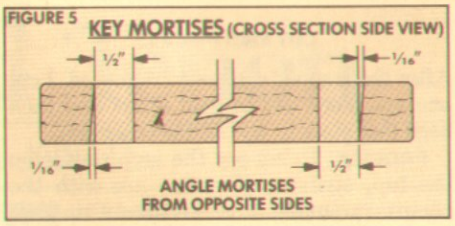

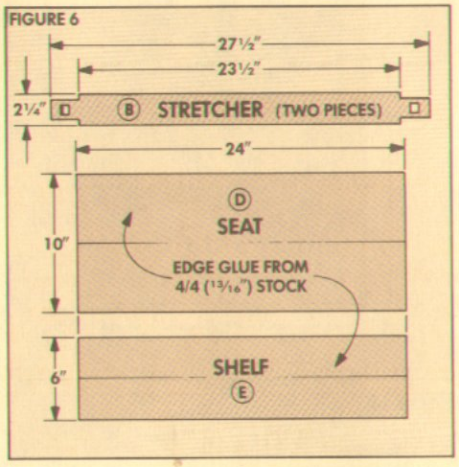

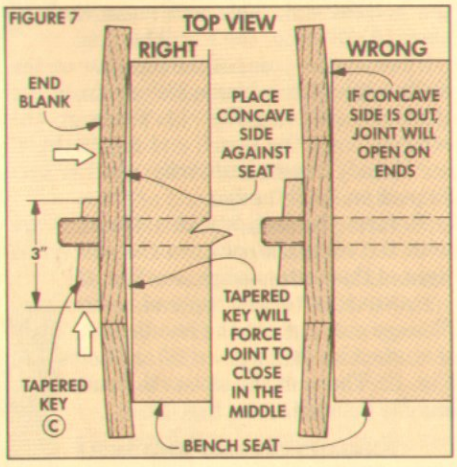

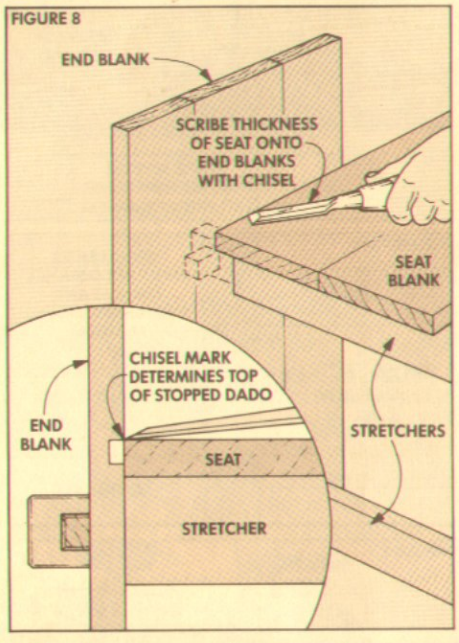

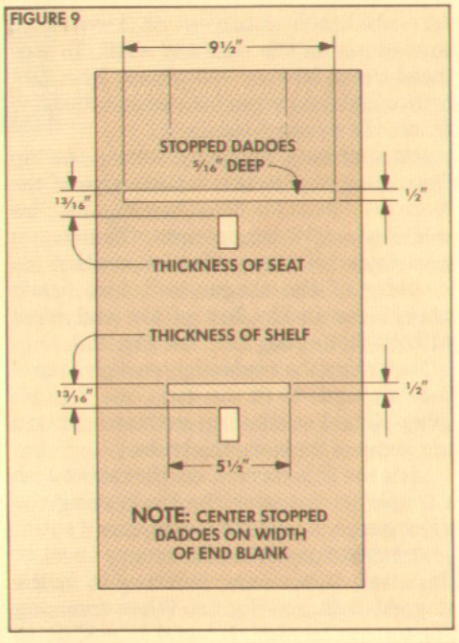

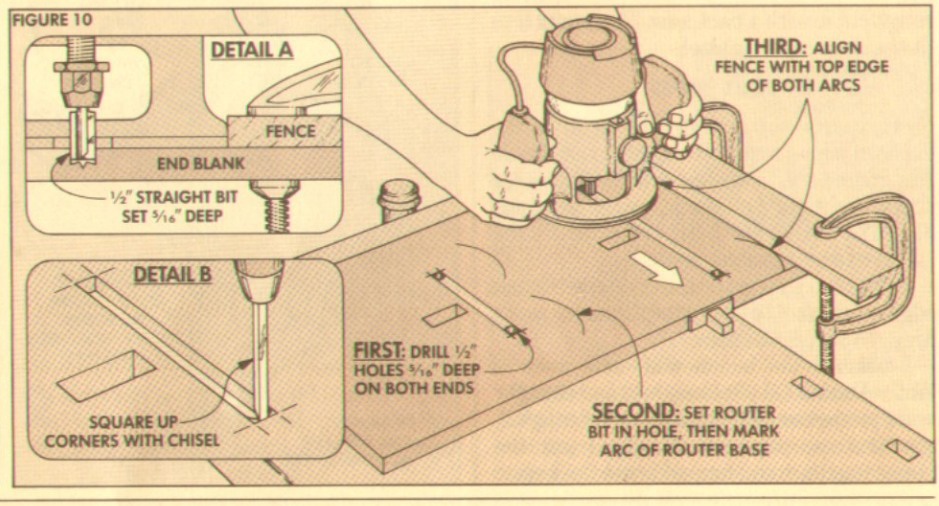

CUT END PIECES

After the stopped dadoes were routed, I cut one end piece (A) to final shape and then used that piece to lay out the other end.

PROFILE. To lay out the arch profile on the top, strike a 4″ radius arc with the compass point on the centerline 19″ up from the bottom end. This will make the end piece (A) 23″ long, see Fig. 11.

Then set the point of the compass on the right edge of the blank 3⅝″ up from the stopped dado, see Fig. 11. Open up the compass until the pencil end meets the 4″ arc already drawn and strike another arc. Repeat on the left edge.

To form the feet, strike a 4″ radius arc with the compass point on the centerline right at the bottom edge, see Fig. 11.

HANDLE. After the top and bottom profiles are cut, cut out the handle slot. To do this, start by drilling two ¾″ end holes, see Fig. 12. Then cut the slot with a sabre saw and file it smooth, see Fig. 13.

TONGUES ON SEAT AND SHELF

After the handle slots were cut, I went back to working on the seat and shelf. To lock these pieces into the end pieces, I cut rabbets on each end to produce tongues that will fit into the stopped dadoes.

SET THE SAW. Begin by setting the rip fence as a stop so the *outside* edge of the blade is ¼″ from the fence, see Fig. 14. This will create a ¼″-long tongue. (The dadoes were routed 5/16″ deep. This insures that the shoulder of the tongue will seat firmly against the inside face of the end piece without "bottoming out," see Fig. 15.)

Now raise the blade high enough to produce a tongue to fit the dado, see Fig. 14. (Shop Note: I sneaked up on this height on a test scrap of the same thickness.)

Once the fit is correct, cut the rabbet with a couple passes over the blade using the miter gauge to guide the workpiece.

NOTCH ENDS. After the tongue is cut to thickness, it has to be trimmed to fit the stopped dado, see Fig. 16. When trimming the tongue to size, I found it easiest to rough cut it with a back saw. Then trim it to fit the dado with a chisel.

ROUT EDGES

Next, rout a bullnose profile on all of the exposed edges and in the handle slot. To do this, mount a ½″ round-over bit in the router and lower it 5/16″ below the router base, see Fig. 17. Then rout both edges of all the pieces except the stretchers.

I also filed a slight chamfer on the bottom edges of the feet to prevent splintering as it's dragged across the floor.

I finished the bench with two coats of Watco Danish Oil (Golden Oak) and then for more protection added two coats of tung oil, see Sources, page 24. Finally, I put the pieces together and tapped home the keys.

FIGURE 11

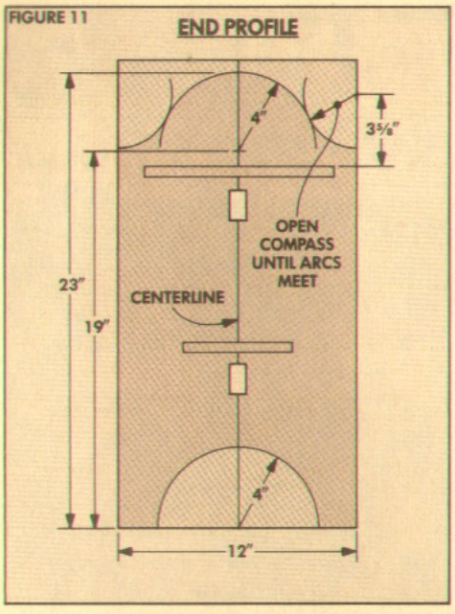

FIGURE 12

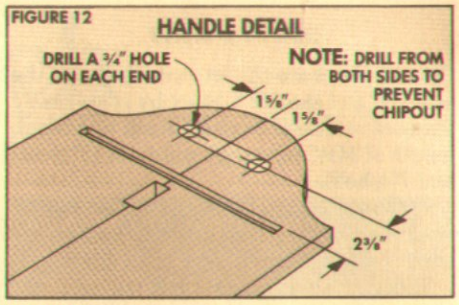

FIGURE 13

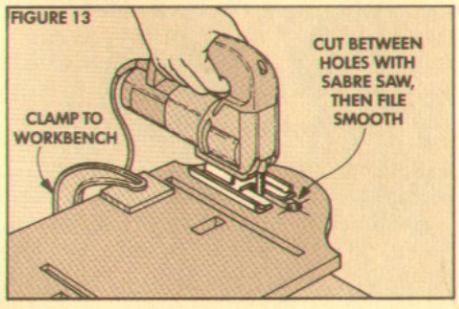

FIGURE 14

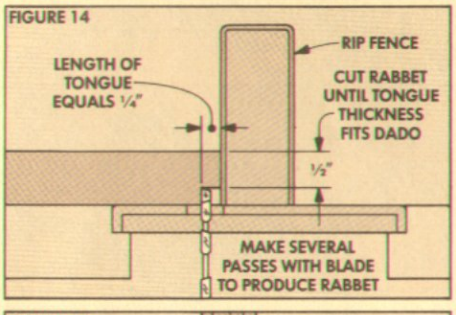

FIGURE 15

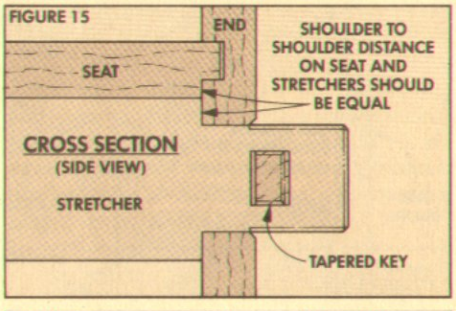

FIGURE 16

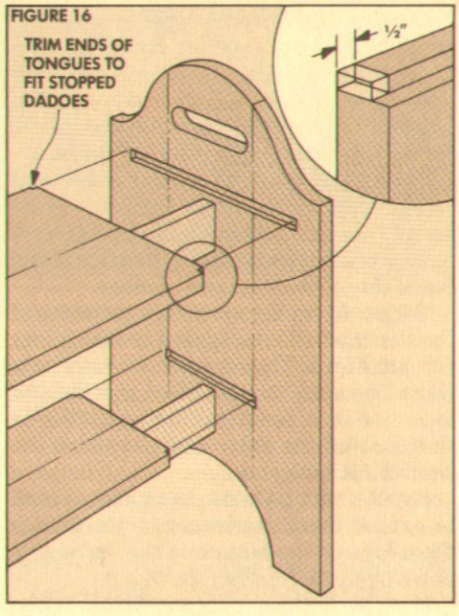

FIGURE 17

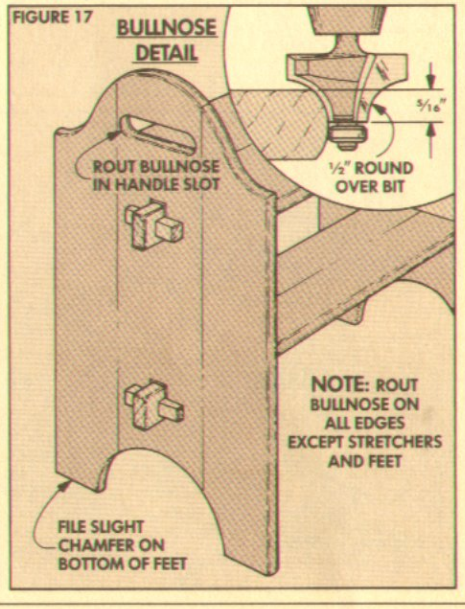

MATERIALS LIST

Overall Dimensions: 27½″ w x 12″ d x 23″ h

A Ends (2)*	13/16 x 12 - 23
B Stretchers (2)	13/16 x 2¼ - 27½
C Keys (4)	¾ x 9/16 - 3
D Seat (1)**	13/16 x 10 - 24
E Shelf (1)**	13/16 x 6 - 24

* Edge-glue from three pieces of 4/4 stock.

** Edge-glue from two pieces of 4/4 stock.

CUTTING DIAGRAM

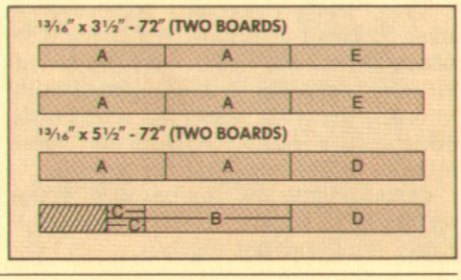

Keyed Mortise and Tenon

THE ORIGINAL KNOCK-DOWN JOINT

When building the country bench shown on page 10, I used what may be one of the first knock-down joints — the keyed mortise and tenon. (Sometimes it's called a "tusk tenon" joint since the tenon runs through the mortise and sticks out the other side like a tusk.) Since the pieces are locked without glue, it's one of the original knock-down connectors.

That's one of the things I like about this joint — it's great for knock-down furniture. In feudal times the heavy trestle tables often included keyed mortise and tenons. Once the banquet was over, the furniture could be knocked down for storage or moved along as his lordship traveled the countryside.

Another thing I like about this joint is that it can be "adjusted" to accommodate humidity changes. When the wood shrinks the key can be tapped in to tighten the joint.

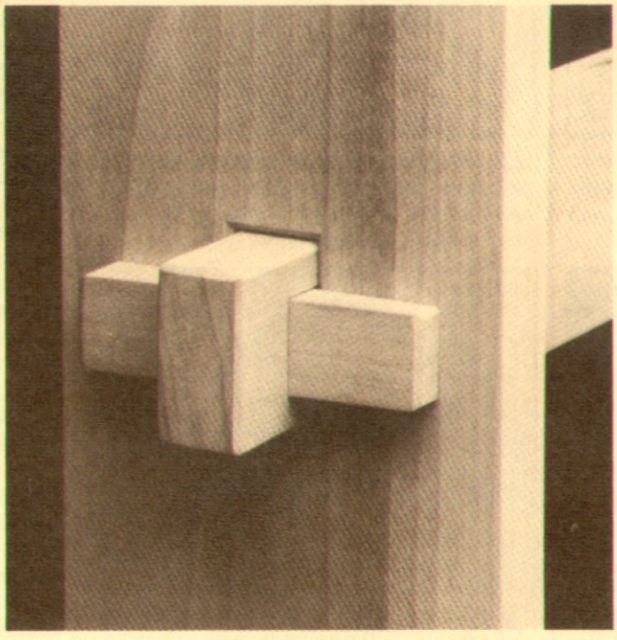

DESIGN CONSIDERATIONS

If it's built correctly, this joint is very strong. Strength in this case means that the joint will hold the stretcher (tenon) to the upright (mortised piece) *without racking*. To help resist racking, the tapered key forces the upright against the shoulders of the tenon. The amount of racking the shoulders will resist depends on the shoulders' size and design.

On a large project such as a trestle table, the tenon is made with four shoulders. That is, shoulders are cut on the top/bottom and the front/back of the stretcher to help disperse the racking pressure and to prevent crushing the wood. On a small project such as the country bench, a tenon with shoulders only on two edges is adequate to eliminate the racking.

Before using the joint in a project, it's a good idea to make a practice joint. I decided to make a practice joint with two shoulders (on the top/bottom) similar to the one on the country bench.

THROUGH MORTISE

The first step in making the joint is to cut the mortise (rectangular hole).

MORTISE SIZE. The width of the mortise equals the thickness of the tenon. Since the joint for the bench has shoulders only on the top and bottom edges, the tenon should be exactly the same thickness as the stretcher (13/16"). Therefore, the mortise is cut to this width.

The length (height) of the mortise has to allow for the shoulders on the top and bottom edges. Subtract the combined depth of both shoulders (3/8" plus 3/8") from the width of the tenon (2¼"). On the bench this made the mortise 1½" long (high).

Once the size is determined, lay out the mortise on *both* sides of the piece of stock using a sharp pencil, see Step 1.

SET OUT BORDERS. Next, "set out" the borders of the mortise with a chisel. Hold the chisel perpendicular to the workpiece with the bevel facing toward the center of the mortise, see Step 1. (To make a jig for setting out the mortise, see page 10.)

Now with the chisel's edge just in front of the pencil line, very lightly tap the chisel with a mallet. (Leave the pencil line intact. If the mortise is a hair small, you can make it larger later.)

After working all the way around the mortise with light taps, clean out the chips and go around again until you're about 1/16" deep.

Next, turn the workpiece over and use the same procedure to set out the borders on the opposite face.

BORE OUT WASTE. Once the mortise's border is defined, bore out the majority of the waste from the center, see Step 2.

Start by boring holes at each end of the mortise about 1/16" from the end lines. Then bore overlapping holes to clean out the waste.

CLEAN OUT WASTE. After boring, again use the chisel to clean out the rest of the waste, see Step 3.

When cleaning out the waste, do it a little bit at a time and work from *both* faces. Start by paring off the ridges between the drilled holes. Then pare away the inside ends and edges until you reach the border lines. Finally, clean out the corners to make sure they're square.

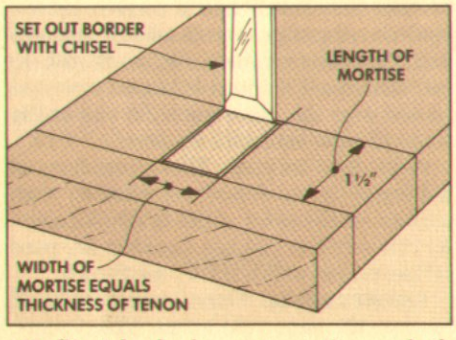

1 *Start by laying out mortise on both sides of workpiece with a pencil. Then set out the border by making taps with chisel. Repeat on opposite face.*

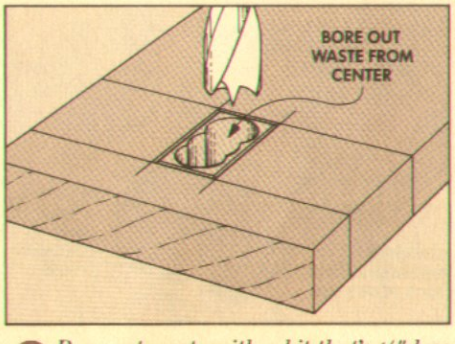

2 *Bore out waste with a bit that's 1/8" less than mortise width. To prevent chipping, bore until bit point comes through back, then bore from other side.*

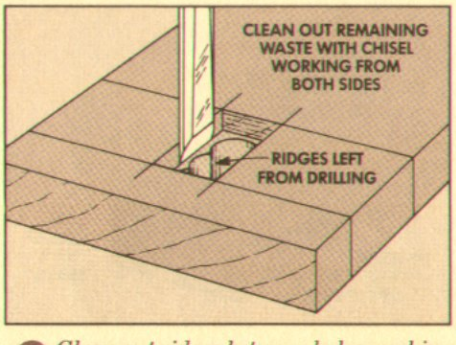

3 *Clean out ridges between holes working from both faces of the workpiece. Then pare away up to the border lines all the way around and square up the corners.*

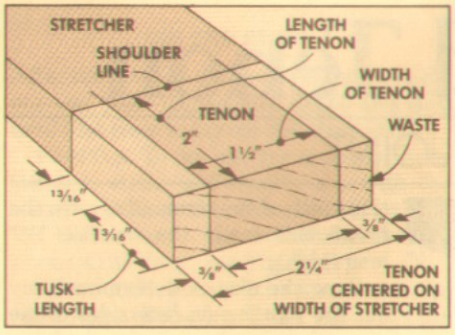

4 *Lay out width of tenon on stretcher to match mortise. Length of tenon equals the thickness of mortised piece plus the desired length of protruding "tusk."*

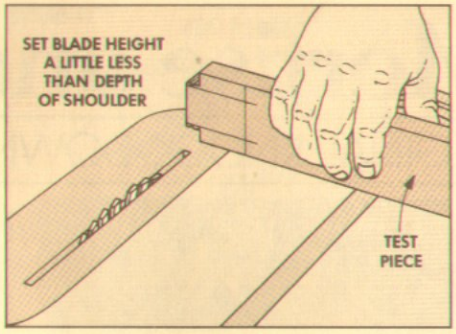

5 *Set table saw blade height a little less than depth of shoulder line and cut notch at end of test piece. Then flip workpiece and notch other edge.*

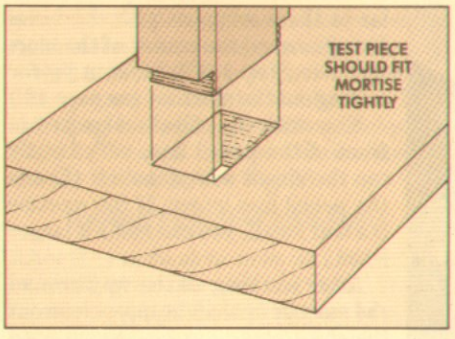

6 *Try fitting the end of the test piece into the mortise. The fit should be tight. If it's too tight, raise the saw blade slightly and cut a little deeper.*

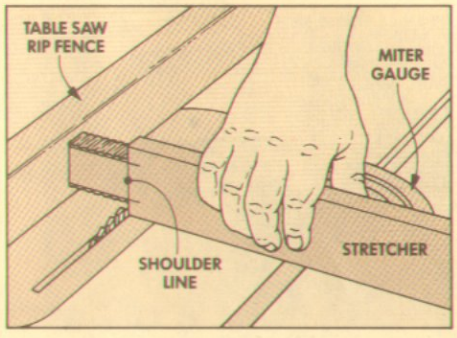

7 *Position rip fence as stop so outside of blade is aligned with shoulder line. Then make repeated passes over the blade until end of stretcher hits fence.*

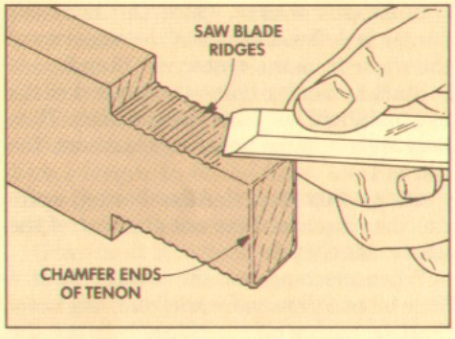

8 *Use a chisel to pare off rough ridges left by the saw blade. Work at an angle to the tenon. Then chisel a slight chamfer around the ends of the tenon.*

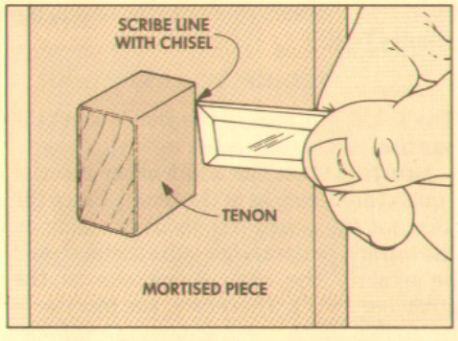

9 *Slip the tenon through the mortised piece until the shoulders are tight against the back side. Then scribe chisel line on tenon flush with the front side.*

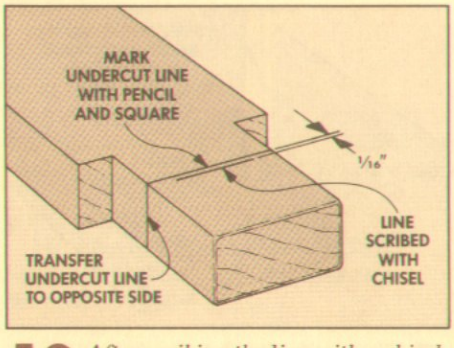

10 *After scribing the line with a chisel, lay out an undercut line 1/16" back from the scribed line. Then square the undercut line around to the opposite side.*

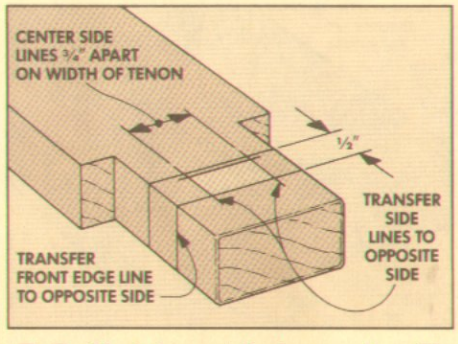

11 *Next, lay out the key mortise. The front edge is ½" in front of the undercut line. Side lines are ¾" apart and centered on the width of the tenon.*

TENON

After the mortise is cleaned out, a tenon can be cut on the end of the stretcher to match the mortise. I started by laying out the shoulders, see Step 4.

SHOULDER. The distance from the end of the stretcher to the shoulder line depends on two things: the thickness of the upright (mortised) piece and the length of the "tusk". (The "tusk" is that part of the tenon that comes out the other side.)

The tusk should stick out long enough to allow room for the smaller "key mortise," plus ½" to ¾" *beyond* the key mortise, refer to Step 19. (The more length beyond the key mortise, the stronger the joint.)

For the country bench, the upright end pieces are 13/16" thick. I wanted the tusk to stick out 1 3/16" from the face of the upright. (That's ½" for the key plus 1/16" beyond for strength.) So I added these together and then laid out the shoulder line 2" from the end of the stretcher, see Step 4.

TENON WIDTH. Next, lay out the width of the tenon to match the length of the mortise. This is done by marking two side lines, leaving a tenon 1½" wide between the lines, see Step 4.

CUT TENON SHOULDERS. After the tenon was laid out, I cut the tenon shoulders on the table saw. To do this, set the saw blade height so it's a little *less* than the side lines you've marked on the stretcher.

Before cutting the tenon shoulders on the actual workpiece, it's a good idea to check out the depth of cut with a test piece that's the same width as the stretcher. To do this, make a couple of cuts right at the end, see Step 5. Then turn the piece over and cut a notch on the other edge.

Now try fitting the test piece into the mortise, see Step 6. It will probably be too big. If so, raise the blade *slightly* and repeat.

It's a matter of sneaking up on the final cut until the tenon fits tight into the mortise. Since you're turning the piece over and cutting off *both* sides of the tenon, raising the blade a slight amount (for example, 1/32") will actually make the tenon smaller by twice that amount (1/16").

After the blade height is correct, set the rip fence as a stop so the shoulder line aligns with the *outside* of the blade, see Step 7. To cut the actual workpiece, make repeated passes over the blade until the end of the tenon hits the end of the rip fence.

PARE OFF RIDGES. This procedure of making a series of passes creates a rough surface on the sides of the tenon. To clean up this surface, and get a perfect fit, pare off the ridges with a chisel, see Step 8.

CHAMFER ENDS. There's one more thing to do on the end of the tenon. Chisel slight chamfers around the end to help guide it into the mortise, see Step 8. (This helps prevent chipout as the tenon comes out the back side of the mortise.)

KEY MORTISE

The keyed mortise and tenon joint has one "key" difference over a regular mortise and tenon. Since no glue is used, the key (or wedge pin) is a mechanical means of preventing the tenon from pulling out of the mortise.

LAYOUT. To accurately lay out the location of the "key" mortise, first slip the tenon into the mortise and scribe a chisel line on one side of the tenon, see Step 9.

Next, lay out an "undercut" line, see Step 10. This undercut line will actually be back *within* the mortise. Its purpose is to allow enough space for the wedge-shaped key to draw the two pieces of the joint tightly together without "bottoming out."

Now the rest of the key mortise can be laid out. First, lay out the front of the key mortise ½" from the undercut line, see Step 11. Then lay out the side lines, so the distance between the side lines equals the thickness of the tapered key. (I used a ¾"-thick key.)

CLEAN OUT WASTE. Once the key mortise is laid out, it's a matter of following the same procedures shown in Steps 2 and 3 to clean out the waste, see Step 12.

ANGLED MORTISE. At this point, all four sides of the mortise are perpendicular to the tenon. To allow the wedge-shaped key to pull the joint tight, the front side of the mortise has to be angled to the same angle as the taper on the key, see Steps 13 and 14.

TAPERED KEY

After the mortise is complete, a tapered key can be cut to fit the mortise. The trick is cutting the taper on the front of the key so it perfectly matches the angle chiseled on the front of the mortise.

MARKING THE TAPER. I've found that it's easiest to do this on an extra-long blank that's the same thickness as the width of the mortise (¾"). Then the actual mortise can be used to transfer the angle to the extra-long blank, see Steps 15 and 16.

After the angle is marked on the blank, the tapered key can be cut slightly oversize. (I did this on a band saw.) Then hand plane the front of the key sneaking up on the final taper. Keep testing the fit and planing until there isn't a gap between the tapered face of the key and the mortise on either side of the tenon.

CUT TO LENGTH. Since the key blank is longer than the finished key, mark and cut both ends so the key is centered on the tenon, see Step 17.

CHAMFERS

To prevent chipping during assembly and to dress up the joint, I filed a chamfer around the mortise, see Step 18.

Finally, dress up the joint by cutting a slight chamfer around the tenon and key, see Step 19.

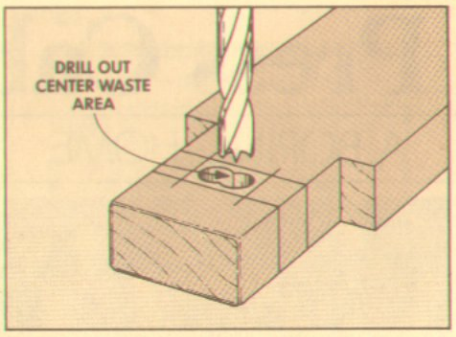

12 *Bore the waste out of the center of the key mortise with a brad point or Forstner bit. Then clean out the mortise with a chisel as shown in Step 3.*

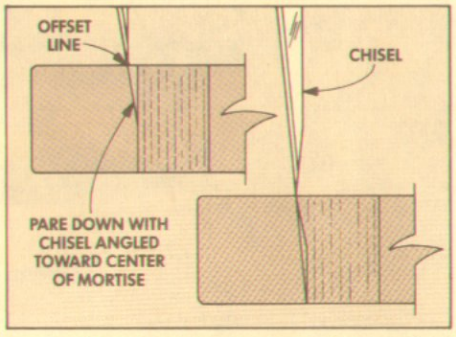

14 *To cut the angled front of the mortise, set chisel point on offset line. Then pare down at an angle until you reach front of the mortise on other side.*

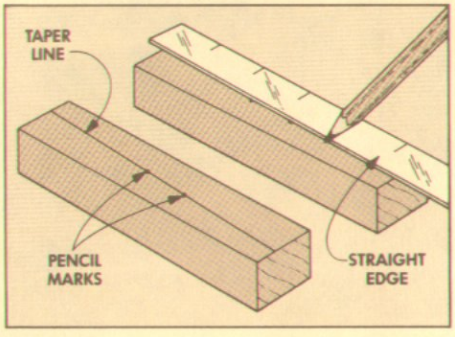

16 *Lay a straight edge across the blank and connect the pencil marks to form a taper line. Then cut slightly outside the line and plane up to the final taper.*

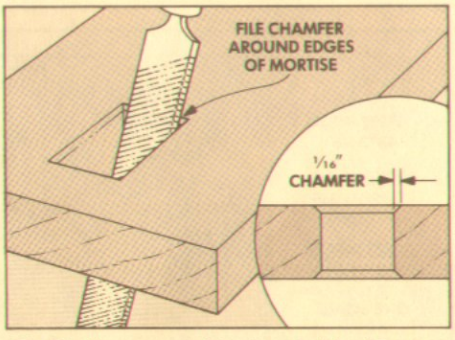

18 *To prevent chipping, hold a file at an angle and file a 1/16" chamfer around the edges of the main mortise on the face side only. (Don't file the key mortise.)*

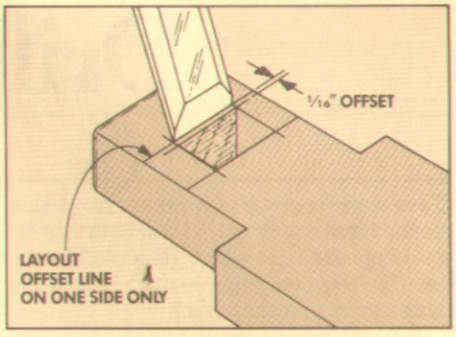

13 *To angle the front edge of the key mortise, start by laying out an offset line 1/16" in front of the mortise opening on only one of the faces.*

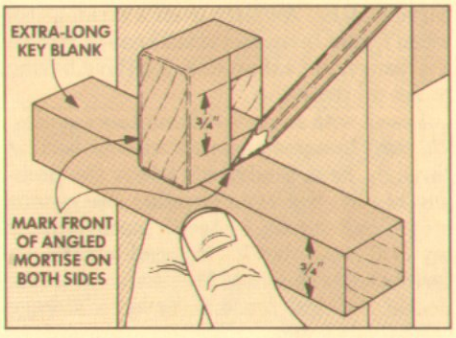

15 *To lay out a tapered key, slip tenon into mortise. Then hold an extra-long blank under the tenon and mark position of angled mortise on both sides.*

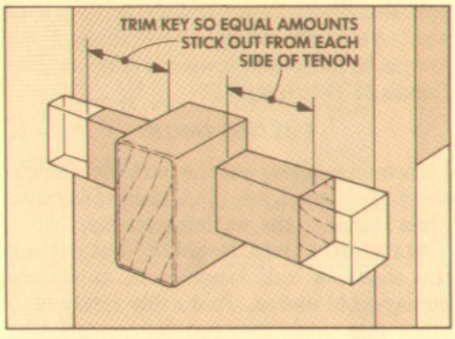

17 *Tap the long tapered key into the key mortise until the joint is tight. Then mark and trim off the ends of the key so it's centered on the tenon.*

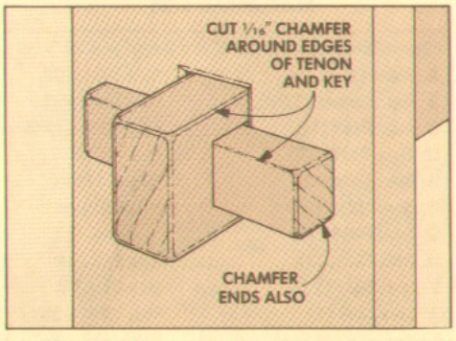

19 *To dress up the joint, cut a 1/16" chamfer around all the outside edges of the tenon and on the exposed edges and ends of the tapered key.*

Drill Press Cabinet

A BORING HOME

If you asked a group of woodworkers to list the top three power tools, I'll bet a drill press would appear somewhere on almost every list. (It's third on mine — right behind the table saw and router table.)

The drill press earned its position in my shop because it does a lot more than bore straight holes.

My drill press is also a mortising machine. With drum sanders, it's used to smooth curved edges. And, it's even a turning tool when I want to make a small knob or reduce the diameter of a short dowel without having to set up the lathe.

I use it with so many different accessories, it's hard to name them all without sorting through them. And that's where the problem begins. Not even counting the various sets of boring bits, I have so much stuff for my drill press that it's in small boxes scattered all over the shop. That's what made me decide the drill press deserved a storage cabinet of its own.

When planning the cabinet, I built it to be at a height to put the drill press table at a comfortable working height. The cabinet shown here is designed for the small drill presses sold by Sears and Delta. You may want to alter the height of the cabinet if you have a larger bench-model drill press (like Delta's 14" bench model).

CUT OUT PARTS

I started by laying out the parts on a single sheet of plywood, see the Cutting Diagram. Then I planned the cutting sequence.

PLYWOOD PARTS. Begin by first cutting the sheet in half lengthwise, then into manageable pieces. To do this safely on a table saw takes two people. Since I was working alone, I used a portable circular saw with the plywood propped up on 2x4s on the floor. Then cut all the small pieces.

MATERIALS LIST

Overall Dimensions: 34⅜" h x 24½" w x 20¼" d	
A Sides (2)	¾ x 19⅞ - 30
B Top/Bottom (2)	¾ x 19⅞ - 24
C Adj. Shelf (1)	¾ x 17¾ - 22⅞
D Base Frt/Bk (2)	¾ x 4 - 23
E Base Sides (2)	¾ x 4 - 19½
F Doors (2)	¾ x 10½ - 21
G Drw. Frt/Bk (2)	¾ x 5⅝ - 22
H Drw. Sides (2)	¾ x 5⅝ - 19
I Drw. Bot (1)	¼ x 21 x 18
J Cab Back (1)	¼ x 23⅜ x 28⅞
K Corner Blocks (4)	1½ x 1½ x 3¼
L Cross Brace (1)	13/16 x 2 - 23
M Edging Strips	¾ x ⅜
N Reinforcing Plate (1)	13/16 x 6 - 23

CUTTING DIAGRAM

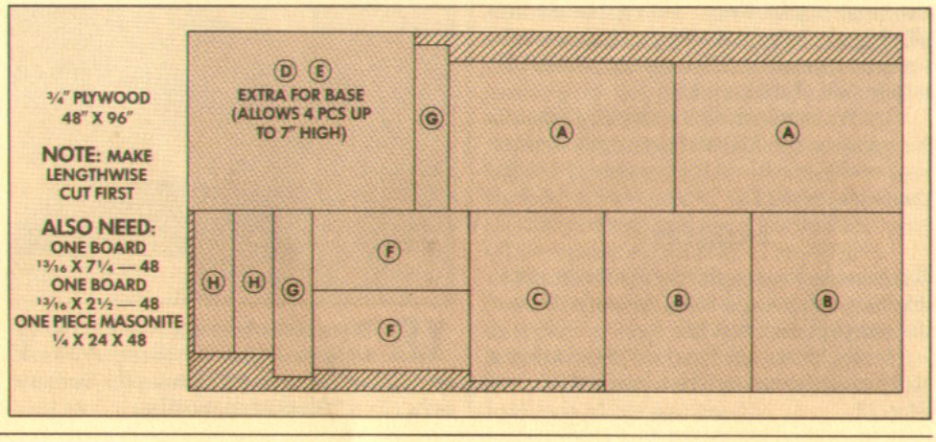

CASE JOINERY

After cutting all the plywood pieces to size, the rabbet joints for the case can be made.

RABBET SIDES. The first set of rabbets is on the top and bottom ends of both side pieces (A), to join the sides to the top and bottom (B), see Detail A, Fig. 1.

BACK RABBETS. The second set of rabbets is cut on the inside rear edge of all four case pieces (A and B). This rabbet is ¼" by ¼" to hold the back, see Detail B, Fig. 1.

ASSEMBLE CASE

The next step is joining the case parts. To do this, I used glue and some fasteners rarely seen in *Woodsmith* — nails.

NAILS AS CLAMPS. I generally object to nails, but they have their place on plywood projects. They're handier than clamps for pulling joints tight and holding parts together while the glue is drying.

PREDRIVE. The trick to using nails for pulling joints tight is to predrive them before the pieces are positioned for assembly. That is, the nails are driven at an angle with the points poking out about 1/16". Then glue is spread on the joints and the pieces are aligned, see Fig. 2.

As the pieces are pressed together, the points bite into the wood. Because the nails are angled, they draw the joint together.

BACK. After the glue is dry on the four corners of the cabinet, the back can be cut from ¼" Masonite so it fits into the back rabbet, see Fig. 3. (I usually cut the back to exact size to fit in the rabbets so it squares the case. But on this cabinet I cut the back about ⅛" small in both dimensions in order to use a trick to align the doors.)

To mount the back, drill 3/16" shank holes spaced 6" apart for No. 6 x ¾" screws. Then place the back in the rabbets so there's about a 1/16" space around all edges. Now drill a pilot hole for one screw in the center of each edge and screw in the four screws to give the case some rigidity.

Shop Note: Don't apply glue or use more than four screws at this point. Shifting the case in relation to the back is the key to getting the doors square later.

CROSS BRACE. With the back holding the case square, a cross brace (L) can be added to divide the section for the drawer and the doors, see Fig. 4. Cut the brace to length to fit between the sides. (Take this measurement at the top in case the plywood sides are buckled or bowed.)

BRACE POSITION. The brace is 6⅞" from the top of the cabinet. Also, it's set back ⅜" from the front edge of the sides. (After the ⅜"-thick trim strips are added, the brace will be ¾" from the front to allow for the ¾"-thick doors, see Fig. 5.)

TRIM STRIPS. The last step is to rip ⅜"-thick trim strips from 4/4 hardwood. These strips are then glued and nailed on the edges of the cabinet, see Fig. 6.

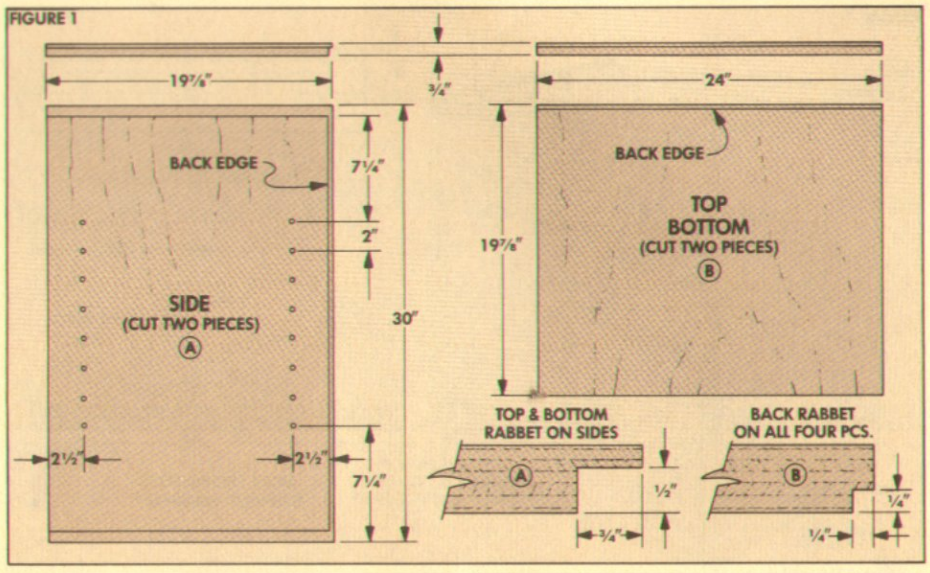

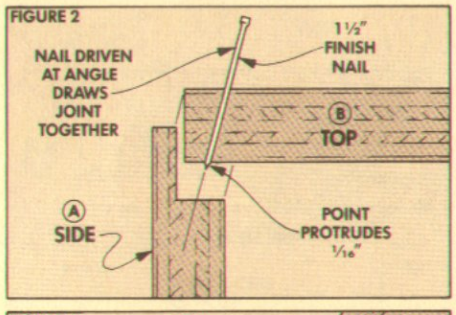

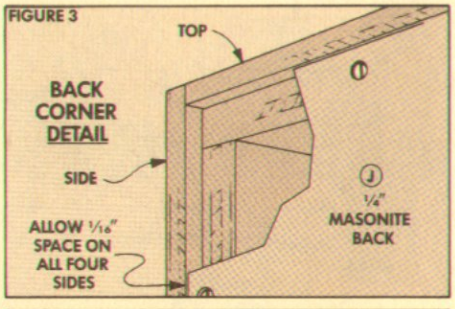

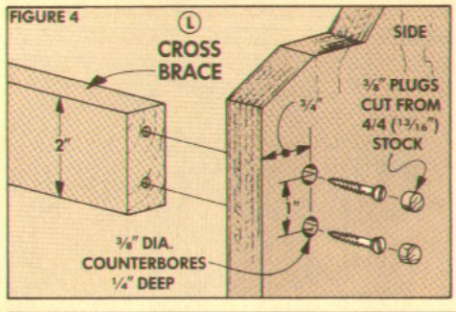

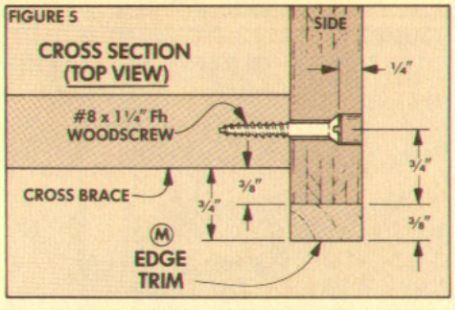

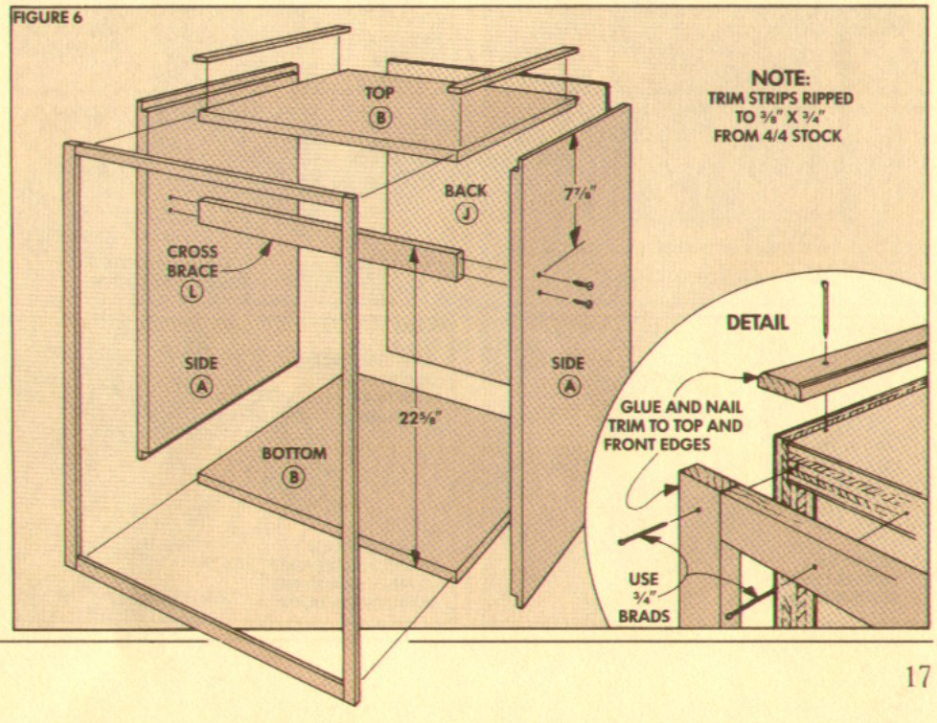

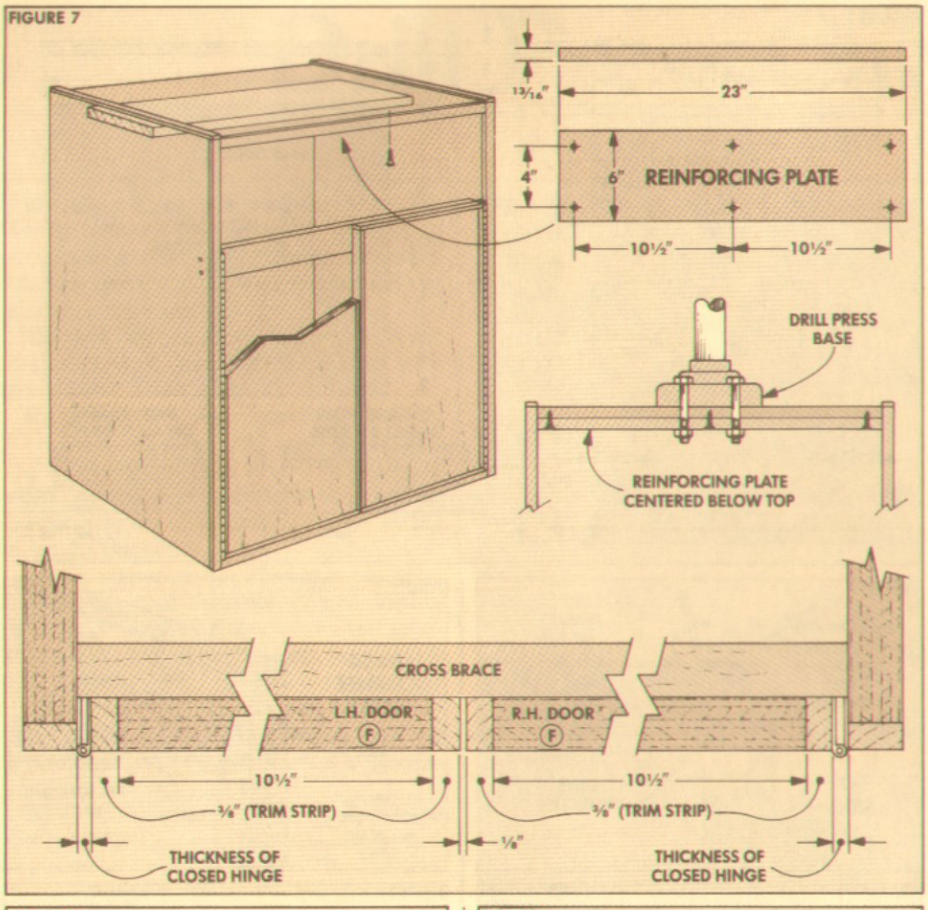

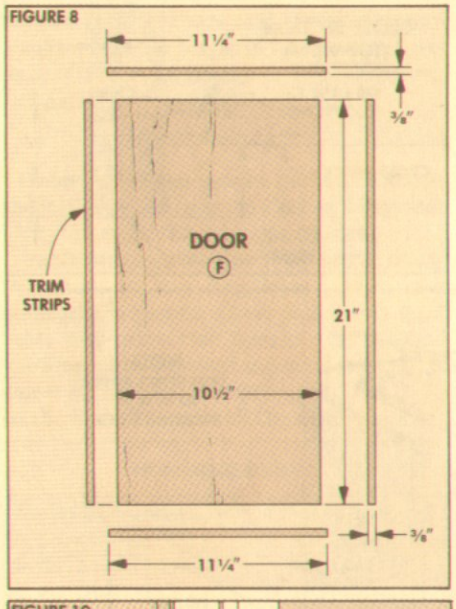

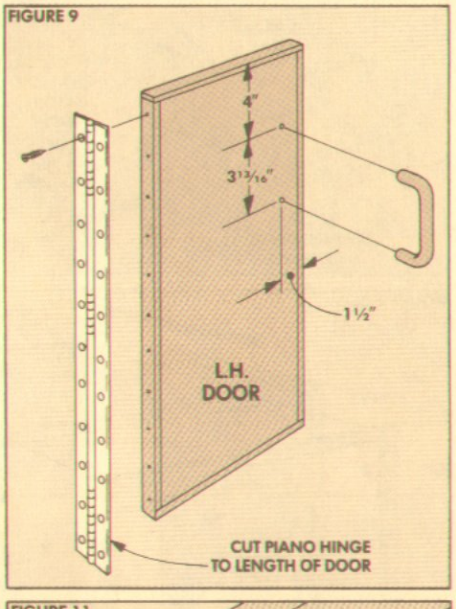

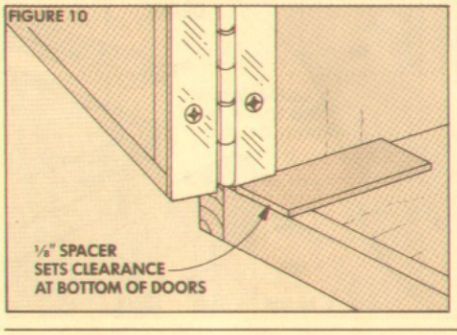

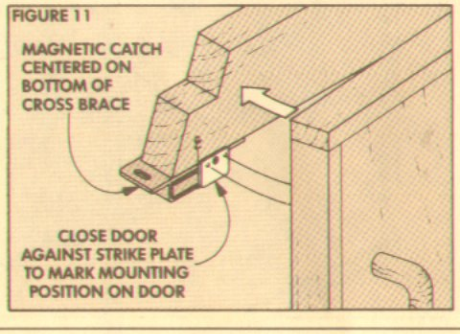

DOORS

After the basic case is complete, cut a reinforcing plate (N) from 4/4 stock to fit snugly between the sides, see Fig. 7. (This adds support so the top doesn't sag.)

Now the doors can be made. To determine the width of the door panels, total up all of the parts and spaces that fit between the sides. This includes the two hinges, four ⅜"-thick trim strips, and a ⅛" gap between the doors, see Fig. 7. Then cut two plywood door panels (F) to make up the difference.

To determine the height of the door panels, measure from the top edge of the cross brace to the inside of the bottom. Then subtract ⅞" (⅛" for clearance and ¾" for the two ⅜"-thick trim strips).

TRIM STRIPS. After the door panels are cut to size, ⅜"-thick trim strips are added to cover the edges, see Fig. 8.

HINGES. To mount the doors, I used continuous hinges, see Fig. 9. Begin by cutting the hinges to length to match the height of the doors. Then screw the hinges to the doors.

MOUNT DOORS. Next, the doors can be mounted. To get them aligned with equal space at the bottom, place a ⅛"-thick piece of scrap under the hinge, see Fig. 10.

ALIGN DOORS. Now the case is squared to align the tops of the doors. This is why the back wasn't mounted permanently earlier.

To do this, remove the back and apply glue in the rabbet. Then put the back in place and slightly tighten the four screws.

Now, force the case one way or another until the tops of the doors line up. Then snug the four screws down tight, and drill pilot holes for the remaining screws and tighten them in place.

CATCH. Next, the catch is installed. Begin by mounting the magnetic part to the bottom of the cross brace, see Fig. 11.

With the magnet holding the plate, close the door on the plate. Two dimples will be left in the door to mark the position where the plate should be screwed to the door.

DRAWER

After the doors are mounted, the drawer can be made. The height of the plywood drawer front (G) is determined by measuring the distance between the tops of the doors and the bottom of the top. Then subtract 1". (¾" for the two ⅜"-thick trim strips plus ¼" for clearance top and bottom.)

DETERMINE WIDTH. The width of the drawer is determined by the sliding hardware. Since the hardware we used (see Sources, page 24) called for ½" clearance on each side, I made the drawer 1" less than the space between the sides, see Fig. 12.

DRAWER BACK. Cut the back of the drawer (G) to the same size as the front. (Later it will be trimmed down to allow clearance under the reinforcement piece.)

SIDES. Now the drawer sides (H) can be cut to size. Rip them to the same width as the front, and to a length of 19".

DRAWER JOINERY

The drawers are joined with the same simple rabbet joints used on the case.

FRONT/BACK RABBETS. The rabbets on the front and back are ½" by ¾", see Fig. 13. When gluing the joints together, use the same angled nail trick used to pull the joints tight, see Joint Detail in Fig. 13.

BOTTOM DADO. After rabbeting the ends of the front and back, make a ¼" by ¼" groove ¼" up from the bottom of the front and side pieces to hold the Masonite bottom, see Bottom Detail in Fig. 13.

CLEARANCE. The last step before assembling the drawers is cutting ¾" from the top of the sides and back to allow clearance for the reinforcement plate (mounted under the top), see Fig. 13. Then nail and glue the drawer together.

TRIM EDGING. When the glue dries, the trim can be applied. Begin by putting the shorter trim pieces that conceal the the gaps for the drawer slides, see Fig. 14. Next, trim the ends of these short pieces flush with the top and bottom edges. Then apply the top and bottom strips.

SLIDING HARDWARE. With the drawer complete, the sliding hardware can be installed. Begin by mounting the inner drawer guides to the sides of the drawer so the mounting holes are 1⅝" up from the drawer bottom, see Fig. 14. Then mount the outer drawer guide to the side of the cabinet with its mounting holes aligned 15/16" above the cross brace, see Fig. 15.

Shop Note: To center the drawer, use the vertical screw slots for initial positioning. Next, adjust the hardware up or down until the drawer is centered. Then put in the screws through the round screw holes.

BASE

After the cabinet is assembled, a base is made. This base is a plywood frame with mitered corners, see Fig. 16.

CORNER BLOCKS. To reinforce the corners of the base, 1½" x 1½" — 3¼" corner blocks are used. Before gluing them in place, a ½" hole is bored through the center for the leveling mechanism.

LEVELING MECHANISM. I made a leveling mechanism for the base to keep the cabinet from wobbling on the shop floor. This mechanism consists of carriage bolts that thread through T-nuts in the bottoms of the corner blocks, see Detail in Fig. 16.

To make the mechanism adjustable from above, I used a hacksaw to cut a screwdriver slot in the ends of the bolts. Next, I bored ½" holes through the bottom of the cabinet to line up with the bolts.

After the base is fastened to the cabinet, the whole cabinet can be leveled through the holes in the cabinet bottom, see Detail.

FIGURE 12

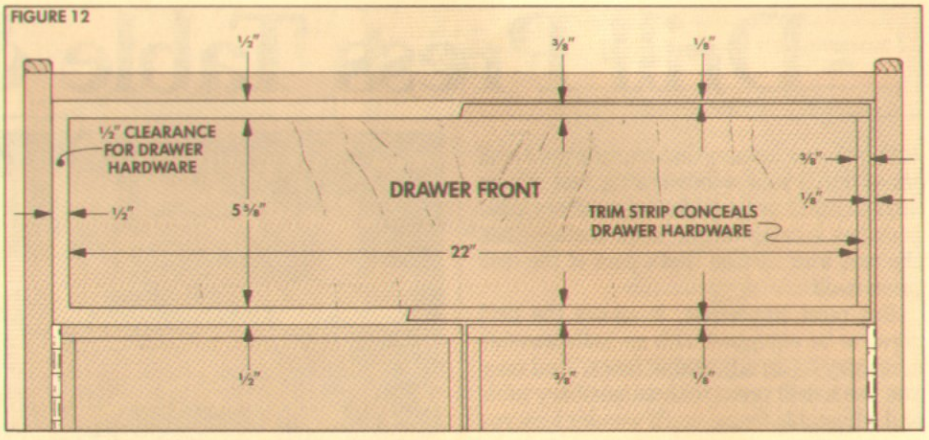

FIGURE 13

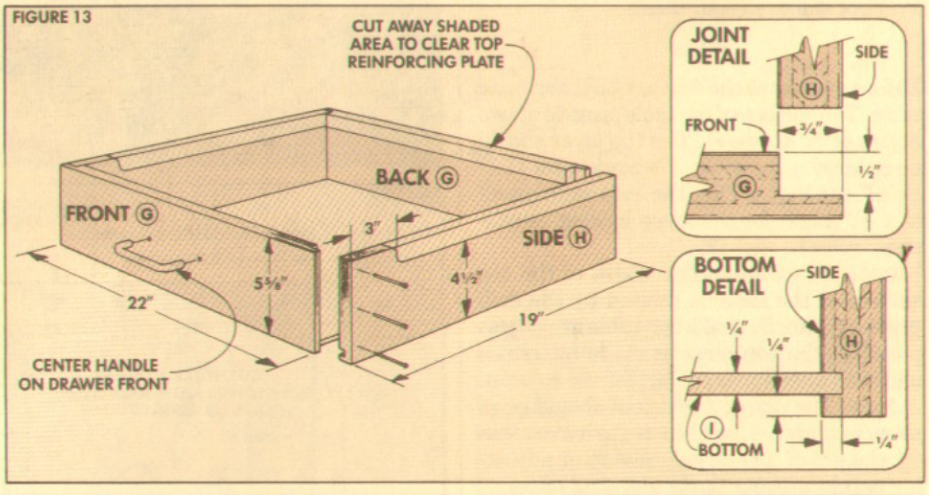

FIGURE 14

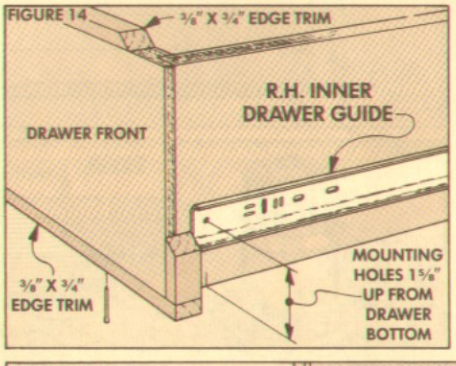

FIGURE 15

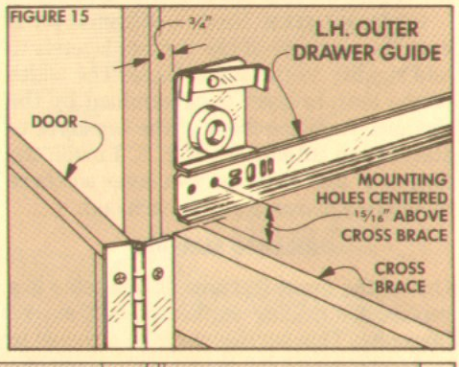

FIGURE 16

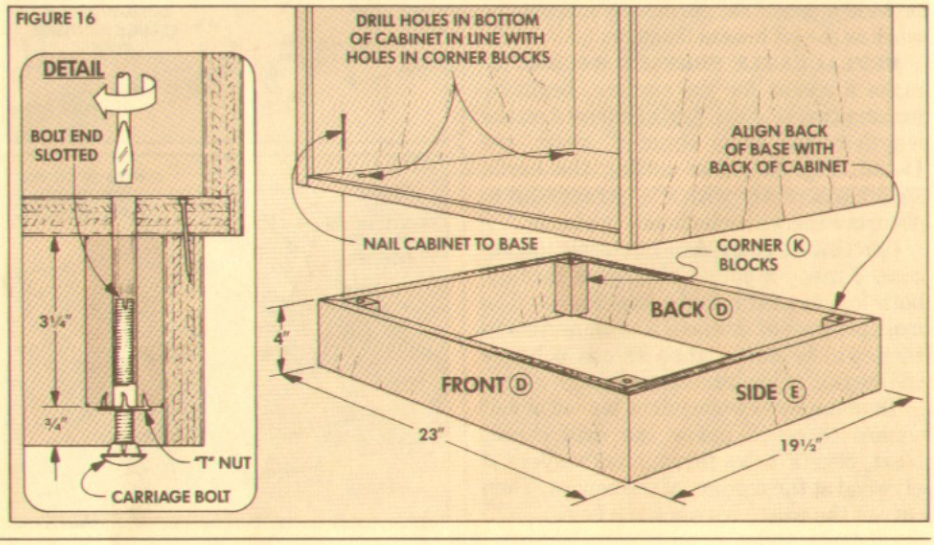

Drill Press Table & Fence

If there's one feature that transforms a drill press into a real woodworking tool, it's an auxiliary drill press table. An auxiliary table provides a much larger work surface than the cast iron surface that's part of the drill press itself.

But most important, it allows the drill press to be equipped with an indispensable accessory — an adjustable fence. And once you use a drill press with an auxiliary table and adjustable fence, you'll wonder how you ever got along without them.

TABLE

Before getting to the fence, I built the basic table. The surface of the table is made of two layers of ¾" plywood. The top layer should be as large as possible. We made ours 11½" by 36", see Fig. 1. Then the ends were cut off at a 45° angle for the fence locking mechanism, refer to Fig. 12.

COLUMN CUTOUT. The width of the top surface of the table is limited by the drill press column. To make the table as wide as possible, the top piece is made oversized and then a section is cut out for the column.

Note: The size of this cutout should be as small as possible, but be sure to leave room for the arc of any locking levers or adjusting cranks on your particular drill press.

BOTTOM LAYER. Next, a bottom layer is cut. The purpose of the bottom layer is to add rigidity to the whole table. The width of the bottom layer is determined by the distance from the front of the top layer to the column cutout, see Fig. 2. I made the length 4" less than the top layer so there would be a 2" overhang on each end.

DRILLING SURFACE

One of the great features of this table is a replaceable drilling surface made from ¼" Masonite. This surface slides in a recess to provide a clean, flat surface to support the work as the bit breaks through.

REPLACEABLE SURFACE RECESS. To make a recess for the surface, begin by making two ¼"-deep kerfs centered on the length of the table about 6" apart, see Detail, Fig. 3. After cutting the kerfs, switch to a router with a ½" straight bit to clean out the waste between the kerfs.

CENTER CUTOUT. After routing the recess, I made a cutout that goes through both layers of the table, see Fig. 4. The main purpose of this hole is to allow a drum sander to be mounted so its end is below the surface of the auxiliary table.

To make this cutout, first lay out a 1½" square centered below the drill chuck. Next, bore 1" holes through both layers of plywood at the corners of the square. Then cut out the waste between the holes.

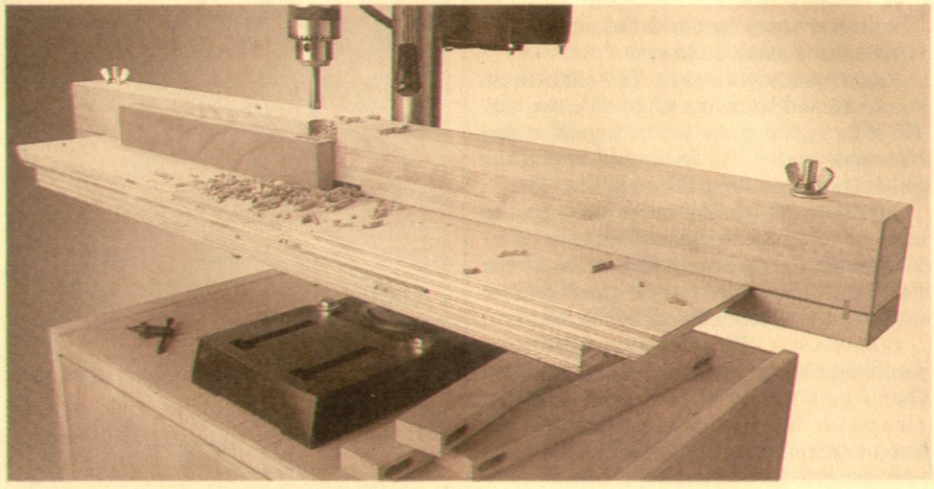

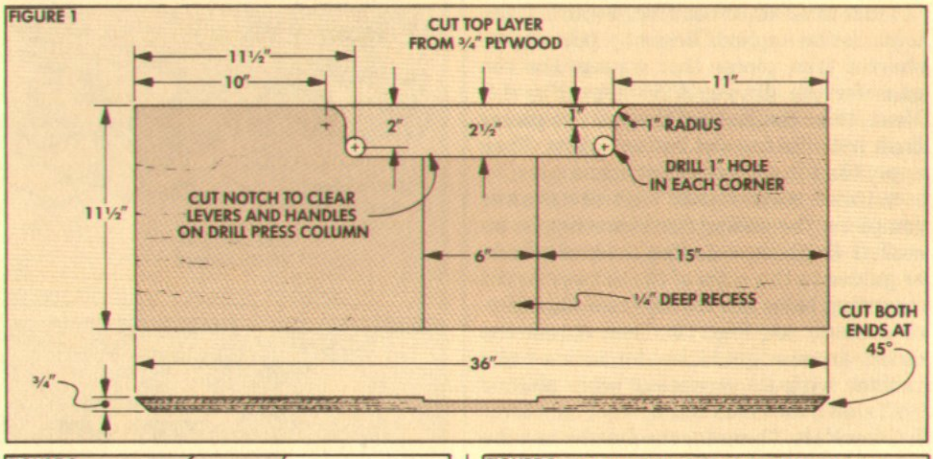

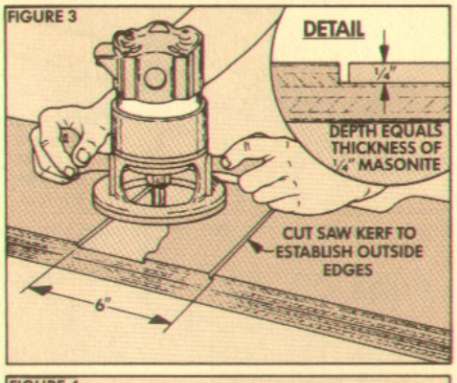

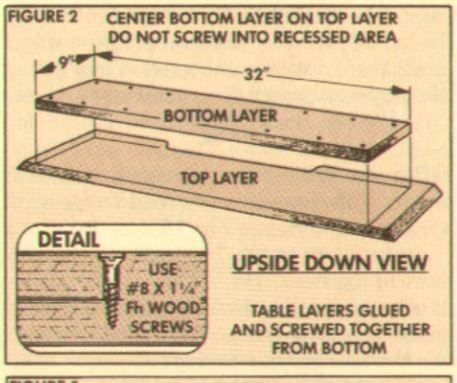

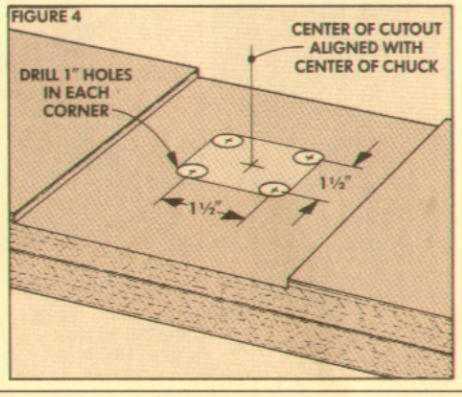

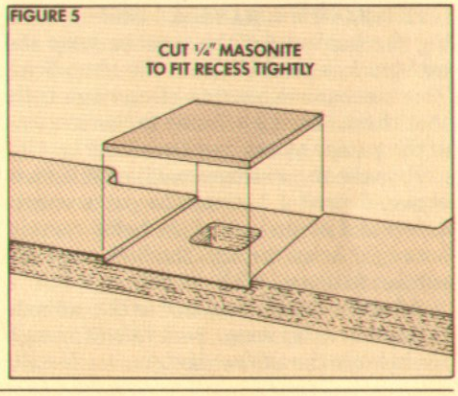

REPLACEABLE SURFACE. After finishing the cutout, I made up a supply of replaceable surfaces to fit in the recess out of ¼" Masonite, see Fig. 5.

Note: I keep a 1½"-thick block to put in the cutout under the Masonite for support when doing heavy drilling (mortising).

MOUNTING HOLES. To mount the table, I bored holes for ⅜" carriage bolts, see Fig. 6. To position the holes, set the table on the drill press with the cutout centered under the drill chuck. Next, trace the mounting slots on the bottom of the table.

After boring the holes through from the bottom. Counterbore the top surface inside the recess so the heads of the carriage bolts are below the surface, see Detail, Fig. 6.

FENCE

The table makes the drill press more functional than ever. To make it even more useful, I added a fully adjustable fence.

GLUE UP. The fence is made from three 2½"-wide pieces of ¾" stock, see Fig. 7. (Before gluing up the pieces, notch the top piece for the drill chuck, see Detail.) When the glue dries, rip the workpiece down to 2" wide to make clean, square edges. Then cut it to a length that's 6" longer than the table. (This allows 3" at each end for the locking mechanism, see Fig. 10.)

LOCKING MECHANISM. The locking mechanism consists of two blocks with their ends cut at an angle that clamp onto the ends of the table, refer to Fig. 12. The blocks are ripped to the width of the fence (2") and cut to a rough length of 4½". Then each block is "hinged" on a spline of ⅛" Masonite.

HINGE. To make the hinge, cut a ⅜"-deep, ⅛"-wide kerf across the bottom of the fence ¾" in from each end, See Fig. 9. Next, make a kerf across each block. Then cut a ⅞"-wide strip of Masonite to fit into the kerfs. (Since the strip is ⅞" wide and the kerfs are ⅜" deep, the block will be held ⅛" from the fence, refer to Fig. 12.)

MARK CUTOFF. To mark the angled end of the blocks, clamp the fence centered on the table so it overhangs the front about half its width, see Fig. 10. Next, insert the spline into the kerf in the block, and then slide the block along the kerf in the fence until it's flush with the front of the table.

Now, with a uniform ⅛" gap between the fence and the block, trace the angle of the edge of the table on the block. Then cut off the waste leaving the line so the block is a little long for clamping, see Fig. 11.

To mount the block, bore a ⅜" hole through the fence and the block 2" from the end for a ⅜" carriage bolt, see Fig. 12.

Finally, glue the splines into the blocks and the fence. When the wing nut is tightened, it pinches the angled end of the block against the angled end of the table to lock the fence in place.

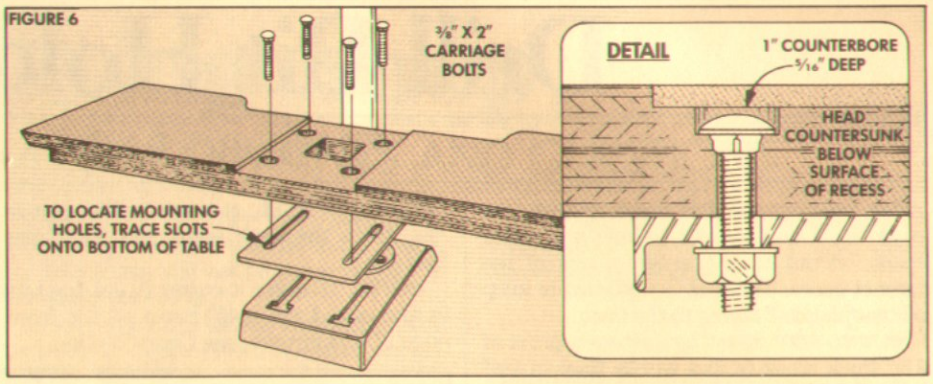

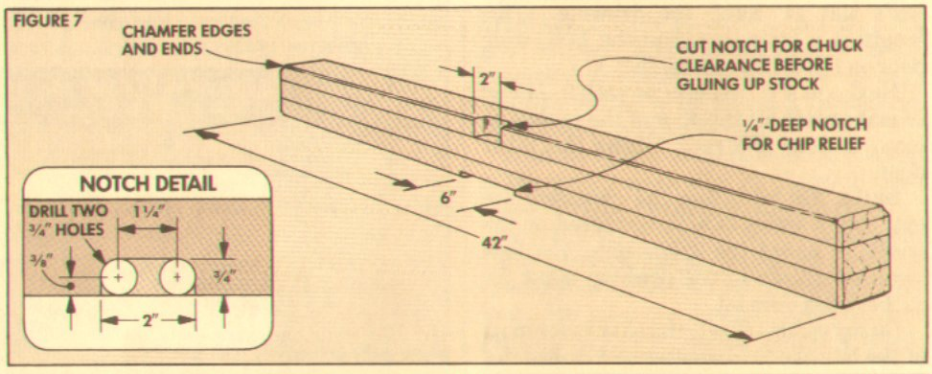

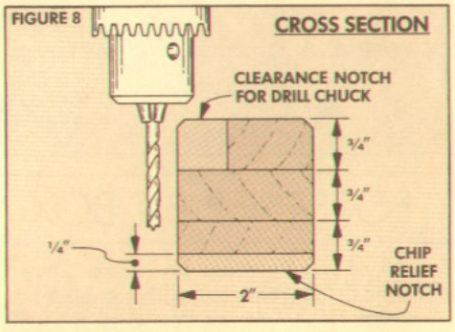

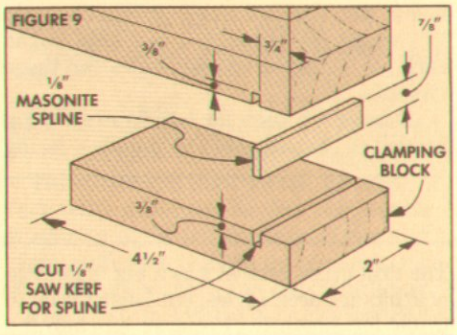

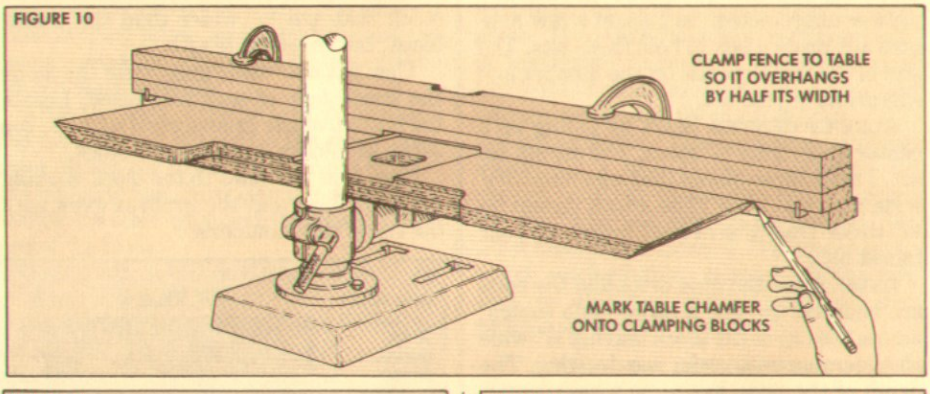

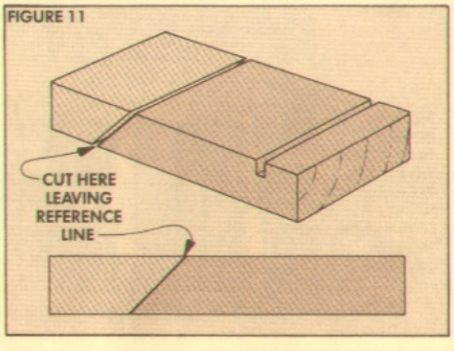

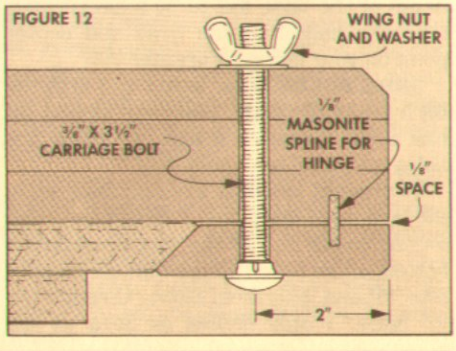

Drill Bit Holders

SPADE BIT RACK

After finishing the drill press cabinet (see page 16), I built a rack to hold a 13-piece spade bit set on the inside of one of the cabinet doors. The rack is designed to keep all the "paddles" facing to the front.

CUT TO SIZE. Start by cutting a piece of 1½" thick stock (a 2x4 works fine) to 1½" wide and 11" long, see drawing. (This length is a little less than the 11¼"-wide door on the drill press cabinet.)

Next, cut a ⅜" chamfer on each front end to make room for the door of the cabinet to close without the rack hitting the other door.

DRILL HOLES. After the chamfers are cut, drill a series of holes centered on the width to accept the spade bits. The hole locations shown in the drawing allow for ¼" between each bit.

On my spade bit set, the shanks for most of the bits are ¼" diameter so I drilled 5/16" holes. But the two smallest bits (5/16" and ¼") would fall through a 5/16" hole in the rack, so I drilled smaller holes for these two bits.

GROOVE. To keep the bits from spinning around on the rack and the "paddles" facing toward the front, cut a ¼"-wide groove 11/16" from the back edge, see the Cross Section.

BEVEL. To make it easier to get the bits in and out, I cut a 45° bevel on the front edge of this groove, see Cross Section.

SCREWHOLES. Next, drill countersunk screwholes for the two screws that hang the rack on the door. The holes are 3/16" in diameter and 1 3/16" from each end.

Finally, screw the rack to the inside of the door with No. 8 x 2" Fh woodscrews.

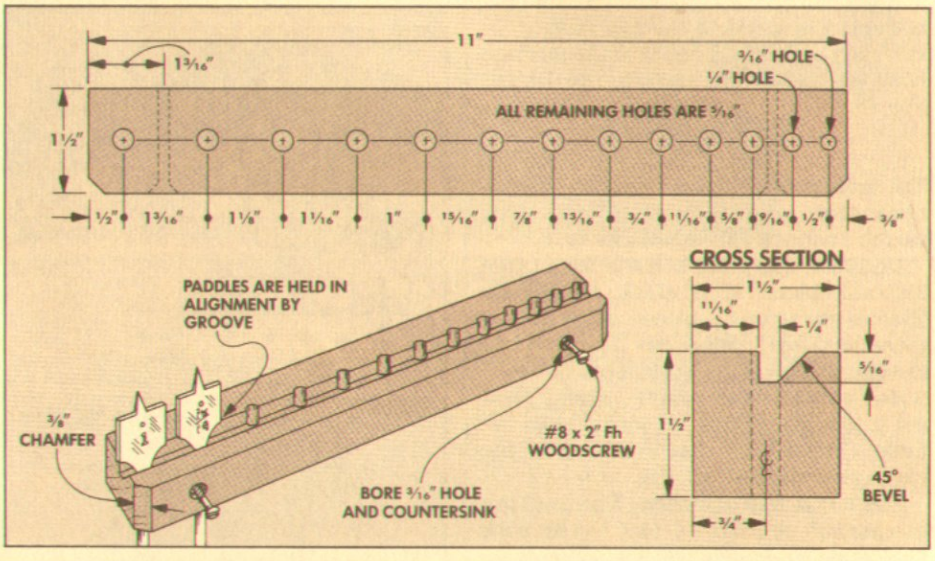

FORSTNER BIT BOX

The drill press cabinet has a big drawer to hold bits and accessories, but I didn't want to throw my expensive Forstner bits into the drawer unprotected. So I spent a few minutes and made a box to hold these bits. The size of the box depends on the number and size of bits in your set.

GLUE-UP CENTER. Start by gluing up a center block from ¾" stock. For my six-bit set, I used three pieces that measured 3½" wide and 4½" long. (The width should be ⅛" wider than the overall length of your tallest bit.)

DADO. After the glue dries and the ends are squared up, cut a large dado (notch) across the top of the block leaving ½"-wide shoulders on both ends, see drawing. The depth of the dado has to be a hair deeper than the height of the head and center point on your largest Forstner bit.

DRILL HOLES. Now, locate and drill the bit holes in the dado. Since my largest bit has a 7/16"-diameter shank, I drilled the holes with a ½" brad point bit.

To prevent sawdust from building up in the bottom of the holes, I drilled the holes for the larger bits all the way through the bottom of the block. To prevent the smaller bits (½" and less) from falling through the ½" holes, I only drilled as deep as the length of the Forstner bit shank. Then I finished drilling through with a smaller bit.

SIDES. Next, cut out two sides from ½" stock that are ½" wider than the center block, but the same length.

Then cut a ¼"-wide groove for the lid on the inside face of each side piece. Locate the bottom of the groove even with the top of the shoulders on the center block.

Now glue the sides to the block keeping the ends flush and the grooves even with the top of the shoulders.

LID. The final piece to make is the lid. It's cut from ½" stock to the same length as the block. As for the width, cut it just a hair less than the distance between the bottoms of the grooves.

Now cut rabbets on both edges of the lid to create tongues that will fit into the grooves in the sides.

ROUND OVER EDGES. The last thing I did was slide the lid into place and then round over the edges of the box with a ⅜" round-over bit.

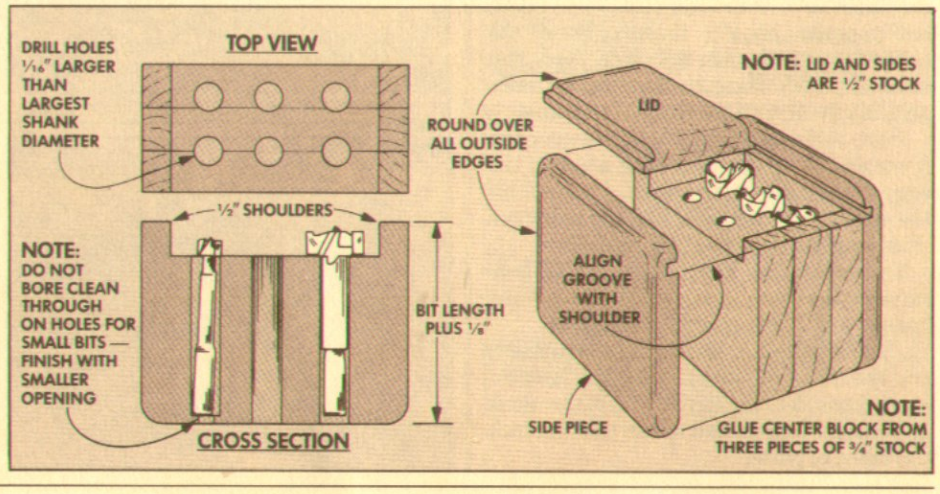

Talking Shop

AN OPEN FORUM FOR COMMENTS AND QUESTIONS

CHANGING A BIT

Often I wish someone would make large drill bits in 32nd or 64th inch increments. There are times when I need to drill a hole that's just a hair under or over a standard-size bit. Sometimes I need to match a metric-sized hole and don't want to buy an expensive metric bit and only use it once.

This was a problem we had a while ago in *Woodsmith* No. 50, when we were deciding what vise to use on the workbench. Most readily-available front vises are made in Europe and have metric-sized guide rods. It's important that the holes drilled through the vise face block for the guide rods be the *exact* size of the rods.

EXPANSION BITS. One solution to the problem is to buy an expansion (expansive) bit such as one of those made by Irwin. These bits are adjustable to any size, but I feel they have two drawbacks. First, they are made for very slow speeds — usually to be used in a hand-powered brace. (Note: Irwin also makes an expansive bit for drill presses, but cautions it's to be used at the *slowest* possible speed.)

The second problem is the cost. They're priced from $15 to $25. That's a lot of money for a tool that you will rarely use.

A DIFFERENT SOLUTION. I found another solution to the problem. First, I buy an inexpensive ($1.50 to $4.00) spade bit that's the next size larger than the hole needed. These bits are usually sold in 1/16" increments. (For more about spade bits, see *Woodsmith* No. 52.)

Then file off the edges of the bit just until you reach the size needed. For example, I recently filed a 1"-diameter spade bit into one that drills a hole exactly 63/64".

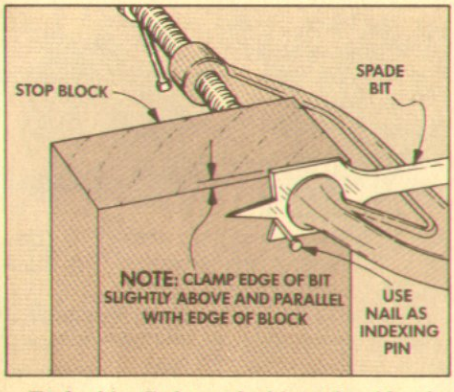

To do this, C-clamp the bit to the side of a block of wood so the edge of the bit sticks out slightly over the end of the block, see drawing. The end of the block will be used as a stop point when filing.

Note: Since the edge of a spade bit is slightly tapered from the end to the shank, the bit's shank will *not* be perpendicular to the edge of the block.

Since you have to take an equal amount off both edges, the bit should only stick out one half the amount you want to decrease the bit. This can be a *very small amount*. If you want to decrease the bit 1/64", you have to let the edge of the bit stick over the end of the block only 1/128". (That's less than the thickness of a playing card. Three playing cards equal about 1/32".)

Once the bit is clamped in position tap in a nail as an indexing pin right under where the bit point joins the paddle, see drawing.

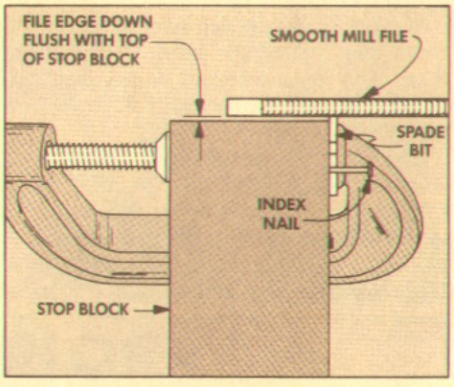

Next, hold a smooth mill file flat and file the edge of the bit just until it's perfectly flush with the end of the block. This can be a difficult thing to see, so I keep brushing my thumb across the edge of the bit to feel if the bit and block are flush.

After the edge of the bit is flush, unclamp the bit and turn it over so the other edge faces up and the inside corner rests against the indexing nail. Now clamp it down tight and file the other edge until it's flush with the end of the block.

Once both edges are filed, test it by drilling a hole.

One more thing. Don't forget to mark the bit in some special manner or the next time you grab your 1" bit, you might be surprised that it's drilling a 63/64" hole.

SOLVENT FOLLOW-UP

In Woodsmith No. 53 you suggested keeping dirty solvent in a glass mayonnaise jar.

I'm sure you're a lot neater and more careful around the shop than I am, but with all those metal tools and long boards being moved around I would worry about any glass container being knocked off a bench and broken. And then you have a real fire hazard as well as a problem with cleaning up a mess that includes broken glass.

I find that an empty coffee can with its polyethylene cover makes a good dirty solvent storage container.

R. L. Marcotte
Penfield, New York

You're right. From time to time I have used glass jars to store solvents — but it's not a good practice. It's especially dangerous in a basement workshop where fumes released from the solvent when a glass jar breaks can be ignited by a gas pilot light.

Another reader wrote to mention that this is the main reason why it's illegal in most places to sell solvents in glass containers.

A TIP. Wm. V. del Solar of Westmont, Illinois saw our suggestion to use a dish for cleaning out brushes and offered another idea. He cuts the bottoms off two-liter plastic soft drink bottles and uses them. Instead of cleaning them out after washing brushes, just throw them away.

FLASH POINTS. Another comment concerning this article was made by Zatis L. Murphy, a chemist for a solvent company. He complimented us on the article but felt we should have explained the importance of understanding flash points. He says, "A flash point is defined as that temperature at which a liquid or volatile solid gives off a vapor sufficient to form an ignitable mixture with air near the surface of the liquid."

The most dangerous solvents are those with flash points at or below room temperature. These are classified as "flammable" or "extremely flammable." Naphtha, most alcohols, some lacquer thinners, and acetone all fall into these categories.

Zatis explains, "There are three requirements for a fire: (1) fuel (solvent), (2) oxygen, and (3) an ignition source. Since the first two will always be present, the third must be eliminated. It's important to watch out for hidden ignition sources too, such as electrical motors and switches which may generate sparks."

CHEMICAL INFORMATION

About the time the last issue went to press we learned about an organization that can help find non-emergency information about solvents and chemicals. It's the Chemical Referral Center run by the Chemical Manufacturers Association.

The Center is a referral service only. That is, they won't be able to answer your questions but can put you in touch with the specific chemical manufacturer who can. The toll free phone number is 800-262-8200. Call between 9 a.m. and 6 p.m. (EST) on Monday through Friday.

Sources

MICROWAVE CART

We're offering the hardware for the microwave cart as a kit (see box below). Or you can order the parts from the following mail order sources:

THE WOODWORKERS' STORE, 21801 Industrial Boulevard, Rogers, MN 55374; 612-428-2199 (Catalog: $2.00. Note: Add $2.50 handling and insurance to your order.) *Joint Connector Bolts* (12 needed), 2¾" long, ¼-20 thread, statuary bronze finish, Order No. D6623, $.55 each, $6.00 per 12. *Cross Dowels* (12 needed), ⅝" (16 mm) long, 13/32" (10 mm) diameter, fit ¼-20 thread bolts, Order No. D6618, $.23 each, $2.52 per 12. *Pin-Style Shelf Supports* (4), brass plated, fit ¼" hole, Order No. D9156, $.15 each. *Piano Hinge*, 1 1/16" x 36", brass plated, Order No. D2900-01, $3.75 each. *Twin Wheel Casters* (4), plate type, 2" wheel, 2½" overall height, black, Order No. C1143, $9.95 per set of 4. *Lid Supports* (1 pair), 6½" long, brass plated, Order No. D1205, $3.95 per pair.

Note about lid supports: The lid supports from The Woodworkers' Store are slightly longer than the ones in our kit (which are from Brainerd Manufacturing Co., No. 1085). We are showing the mounting procedure for the Brainerd supports in the drawing on page 9. If you use The Woodworkers' Store supports (No. D1205), you will have to drill the holes for the lid support ½" farther away from the piano hinge.

JOINT CONNECTORS. There are a number of other mail order sources that you can order the knock-down joint connectors from:

MEISEL HARDWARE SPECIALTIES, P.O. Box 258, Mound, MN 55364; 800-441-9870 (Note: $25.00 minimum order. Catalog: $1.00). *Joint Connector Bolts*, 2¾"-long, Order No. 7030, $2.29 per 10. *Cross Dowel Nuts*, Order No. 7020, $1.95 per 10.

TRENDLINES, 375 Beacham St., Box 6447, Chelsea, MA 02150; 800-343-3248 (Catalog: $2.00) *Cross Dowel Joint Sets*, includes steel cross dowels, 2¾" bolts, and Allen wrench for tightening, Order No. MHD234, $15.95 per pack (approx. 50 sets per pack).

WOODCRAFT SUPPLY CORP., 41 Atlantic Ave., Dept. WS, Post Office Box 4000, Woburn, MA 01888, 800-225-1153 (Catalog: Free). *Cross Dowels*, Order No. 06K15, $4.95 ppd for bag of 25. *Connector Bolts*, (Note: The black oxide finish on these bolts is different from the bronze finish on the bolts from the other sources. And these bolts are longer — 3⅛" long. They will require a slightly deeper hole.), Order No. 06K55, $6.90 ppd for bag of 25.

COUNTRY BENCH

The country bench doesn't need any hardware, but we did use a little different finishing procedure than usual. We built the bench out of red oak and wanted to stain it to give it a "country" look. Normally we would use a stain like Minwax Golden Oak. But the sample board we made using this color of Minwax came out with a slightly brownish cast. We were looking for more of a yellow/golden tone.

About this time, Ken, our Project Designer, mentioned that he had been refinishing some oak woodwork at home and was using Watco Danish Oil (Golden Oak color) as a stain. The color almost perfectly matched the natural golden color that oak develops over a number of years.

We took his advice and used Watco Danish Oil Golden Oak on the bench. It's available from The Woodworkers Store (see the address above). Order No. P1635, $6.15 a pint, $8.35 a quart.

The Watco Danish Oil gave us the color we wanted, but it didn't provide the surface protection we thought would be needed. To give the bench more luster and protection, we added two top coats of tung oil. (Note: Before adding any other finish on top of Danish Oil, be sure the Danish Oil is *completely* dry and any oil that has seeped back out of the pores has been wiped flat.)

DRILL PRESS CABINET

We're offering the hardware for the drill press cabinet as a kit (see box below). You probably can also find all of the hardware at a local hardware store or home center.

We built our drill press cabinet using birch plywood and oak drawer pulls to match the table saw cabinet in *Woodsmith* No. 47. We also used a brass piano hinge to match the tool cabinet in *Woodsmith* No. 42. This hardware adds a nice touch, but isn't necessary. The important thing is that the drawer slides, pulls, magnetic catch, and hinges fit the cabinet.

The hardware we used are as follows: *Drawer Slide*, 18" length, ½" side clearance required, rated for 75 pound load, made by Knape & Vogt Mfg. Co., No. 1300. We found these slides locally cost about $5.50 to $7.00 a set. *Oak Drawer Pulls* (3), 3¾" center boring. *Piano Hinges* (2), with screws, 1½" wide, 24" long, brass. *Magnetic Catch*, with 2 strike plates, (Note: You could also use two separate catches, one for each door.) *Pin-Style Shelf Supports* (4). *T-Nuts* (4), to accept ⅜" bolts. *Carriage Bolts* (4), ⅜" x 3".

PROJECT KITS

MICROWAVE CART

Woodsmith is offering a kit of hardware for the microwave cart shown in this issue. This kit includes:

- (12) Joint Connector Bolts, 2⅜", ¼-20 thread.
- (12) Cross Dowels, 9/16" long, 13/32" diameter, to fit ¼-20 thread bolts above.
- (4) Pin-Style Shelf Supports, brass plated, fit ¼" hole.
- (1) Piano Hinge, 1 1/16" x 30", brass plated, with screws.
- (1 pair) Lid Supports, one right-hand, one left-hand, brass plated. These are Brainerd No. 1085 lid supports.
- (4) Twin Wheel Casters, plate type, 2" wheels, 2½" overall height, black.

The total price (we pay the postage) for this kit is $24.95. (Iowa residents add 4% sales tax.) Price good through 12/31/88.

To order the hardware kit, just write your order on a piece of paper: Microwave Cart Hardware Kit #54A. Send it with your name, address, and payment (no charge cards or phone orders, please) to: Microwave Cart Hardware Kit, P.O. Box 10350, Des Moines, IA 50306. Please allow 4 to 6 weeks for delivery.

DRILL PRESS CABINET

Woodsmith is also offering a kit of hardware for the drill press cabinet. This kit includes:

- (1 pair) Drawer Slides, 18" long, ½" side clearance required, rated for 75 pound load. These are Knape & Vogt No. 1300 slides.
- (3) Drawer Pulls, Oak, 3¾" center boring.
- (2) Piano Hinges, 1½" x 24", brass plated, with screws.
- (1) Magnetic Catch, with 2 strike plates.
- (4) Pin-Style Shelf Supports, brass plated, fit ¼" hole.
- (4) T-Nuts, to accept ⅜" carriage bolts.
- (4) Carriage Bolts, ⅜" x 3".

The total price (we pay the postage) for this kit is $24.95. (Iowa residents add 4% sales tax.) Price good through 12/31/88.

To order the kit, just write your order on a piece of paper: Drill Press Cabinet Hardware Kit #54B. Send it with your name, address, and payment (no charge cards or phone orders, please) to: Drill Press Cabinet Hardware Kit, P.O. Box 10350, Des Moines, IA 50306. Please allow 4 to 6 weeks for delivery.